INSTRUCTIONS

for

SINGLE NEEDLE
INTERLOCK MACHINES

CLASSES

15400 15500 15600

CATALOG No. 40 A

UNION SPECIAL MACHINE COMPANY

General Office: 400 North Franklin Street

Factory: Franklin Street, Kinzie Street and Austin Avenue

CHICAGO, ILLINOIS

BRANCH OFFICES:

New York, N. Y. Philadelphia, Pa. Johnson City, N. Y. Amsterdam, N. Y.
Cohoes, N. Y. Rochester, N. Y. Utica, N. Y. Cincinnati, Ohio
St. Louis, Mo. Minneapolis, Minn. Boston, Mass. San Francisco, Cal.
Toronto, Canada Montreal, Canada

From the library of Diamond Needle Corp.

Copyright 1920
by
Union Special Machine Co.
Chicago, Illinois

From the library of: Diamond Needle Corp.

INDEX

PAGE

DISTINCTIONS BETWEEN CLASSES AND STYLES 7

GROUPING OF MACHINES 7
- Group 1, Using short looper and long looper, illustrated ... 8
- Group 2, Using short looper and long spreader, illustrated 10
- Group 3, Using short spreader and long looper, illustrated 11

SEAMS
- Widths of 13
- Felled 13
- Re-enforced with tape, illustrated 13
- Three-thread stitch
  - Elastic or "Square-edge," illustrated 9
  - Flat or "Union Overseaming," illustrated 9
- Two thread stitch
  - Edge finishing, illustrated 11
  - Flat seaming, illustrated 11
  - Picot, illustrated 12

INSTALLATION
- Table 15
- Pulleys
  - Machine 15
  - Line shaft 15
  - Transmitter 15
- Belts 15
- Fastening transmitter to table, illustrated 16
- Regulating flat belt tension 17
- Fastening machine to table 17
  - Caution 18
- Belting sewing machine to transmitter 18
- Transmitter treadle 18
- Foot Lift treadle 18
- Clothing guard 18

OILING MACHINES 19
- Class 15400, illustrated 19
- Class 15500, illustrated 20
- Class 15600, illustrated 21

From the library of Diamond Needle Corp

TRANSMITTER

PAGE

Lubricating 22
Cleaning 22
Assembling, illustrated 23

ADJUSTING THE STITCH FORMING DEVICES
Needle 24
Needle bar 24
Long looper or long spreader 24
Short looper or short spreader gauge, illustrated 25
Short looper or short spreader 25

COMBINED THROAT PLATE CENTER SUPPORT, NEEDLE GUARD, THREAD GUARD, AND LOWER KNIFE SUPPORT, illustrated 26

FEEDING MECHANISMS
Plain 28
Tiltable, illustrated 28
Differential, illustrated 30
Top, illustrated 32

TRIMMING MECHANISM, CLASS 15400, illustrated 34
Lower knife 34
Upper knife 34
Setting the knives 35
Changing the knives 35

KNIFE GRINDERS, illustrated 36-37
Installation 36
Speed 37
Grinding the knives 37
Lower knife 38
Upper knife 38

THREAD STANDS, illustrated 39

TAPE SPOOL SUPPORT AND GUIDE 39

NEEDLES, illustrated 40
Ordering 40
Table of sizes 41

SPEEDS OF MACHINES 42

THREADS 42

From the library of: Diamond Needle Corp

PAGE

TENSIONS, NEEDLE THREAD 42

THREADING OF MACHINES 42

15400 A 43
" C 44
" D 45
" E 46
" F 47
" G 48
" H 49
" J 50
" L 51
" M 52
" N 53
" P 54
" Q 55
" R 56
" S 57
" T 58
" U 58
" W 59
" X 59
" AA 60
" AB 61
" AC 62
" AD 63
" AE 63
" AF 64
" AG 65
" AH 66
" AJ 67
15500 A 68
" C 69
" D 70
" E 71
" F 72
" G 73
" H 73
15600 A 74
" B 75

From the library of: Diamond Needle Corp.

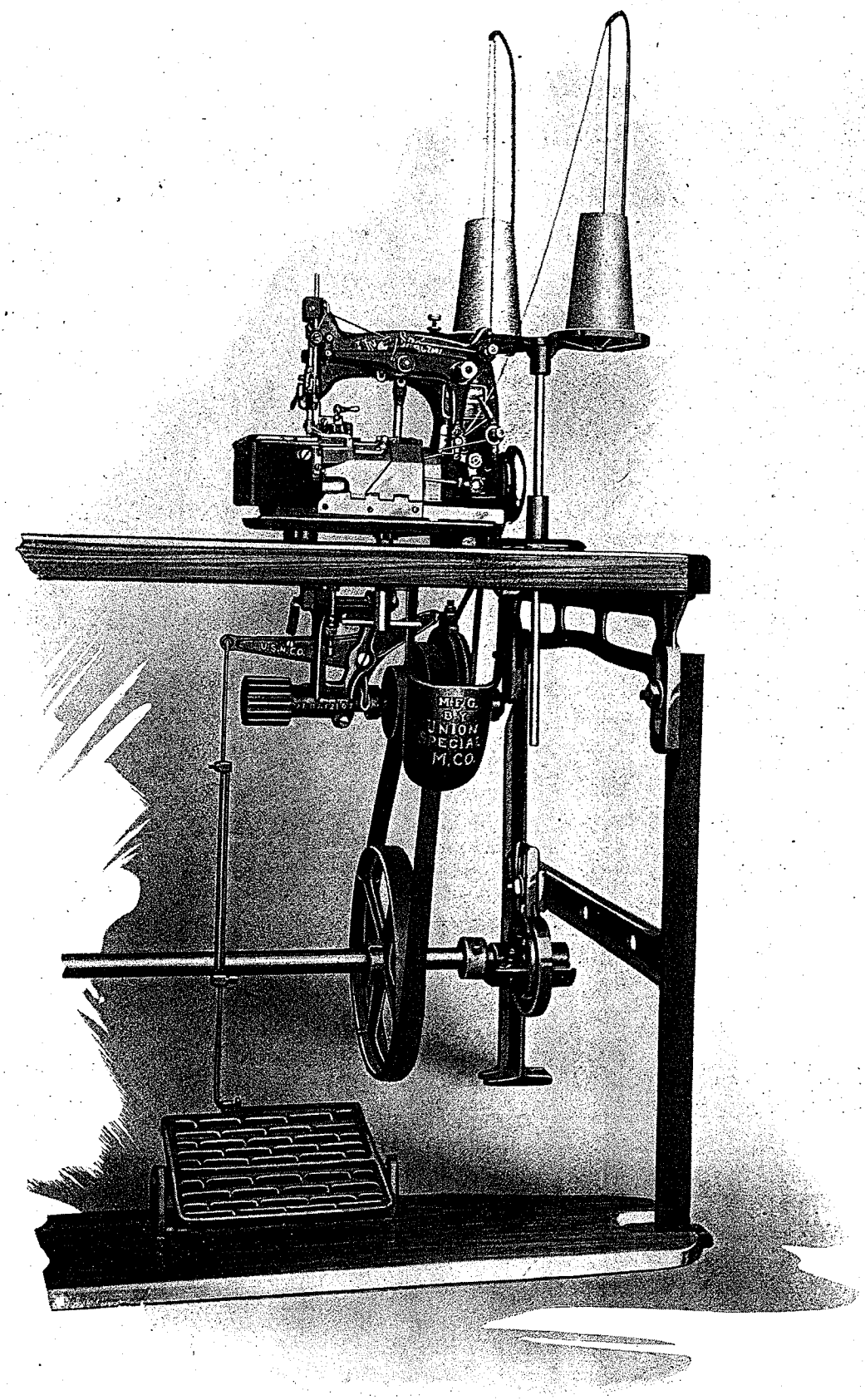

STYLE 15400A—Ready to Operate

From the library of: Diamond Needle Corp

DISTINCTIONS BETWEEN CLASSES AND STYLES

These machines make overedge stitches and use either two or three threads.

The machines of the different classes are divided into styles, the styles differing one from another according to the fittings required for the various kinds of work. The styles are indicated by the letter or letters following the class number. The class number is stamped on the name-plate of each machine but the style is only indicated in the catalog.

The main distinctions between the three classes are as follows:

Class 15400 machines are each fitted with a lower feeding mechanism and a trimming mechanism, but not with a top feeding mechanism.

Class 15500 machines are each fitted with a lower feeding mechanism but not with a trimming mechanism nor with a top feeding mechanism.

Class 15600 machines are each fitted with a lower feeding mechanism and a top feeding mechanism, but not with a trimming mechanism.

GROUPING OF MACHINES

All 3-thread machines use a short looper and a long looper which co-operate with each other and with the needle. Some 2-thread machines use a short looper and a long double-pronged spreader which co-operate with each other and with the needle. All other 2-thread machines use a short spreader and a long looper which co-operate with each other and with the needle. The needle and loopers are always threaded but the spreaders are never threaded.

These machines have therefore been formed into three groups, as follows:

GROUP 1.....3-thread stitch, short looper, long looper.

GROUP 2.....2-thread stitch, short looper, long spreader.

GROUP 3.....2-thread stitch, short spreader, long looper.

From the library of: Diamond Needle Corp.

GROUPING OF MACHINES

Group 1 As the needle begins to rise, it throws out a loop of needle thread at the rear of the needle, and simultaneously the short looper moves to the right and into the needle thread loop. As soon as the short looper reaches the path of travel of the long looper it is given a decided dwell, and the long looper then enters the short looper thread loop.

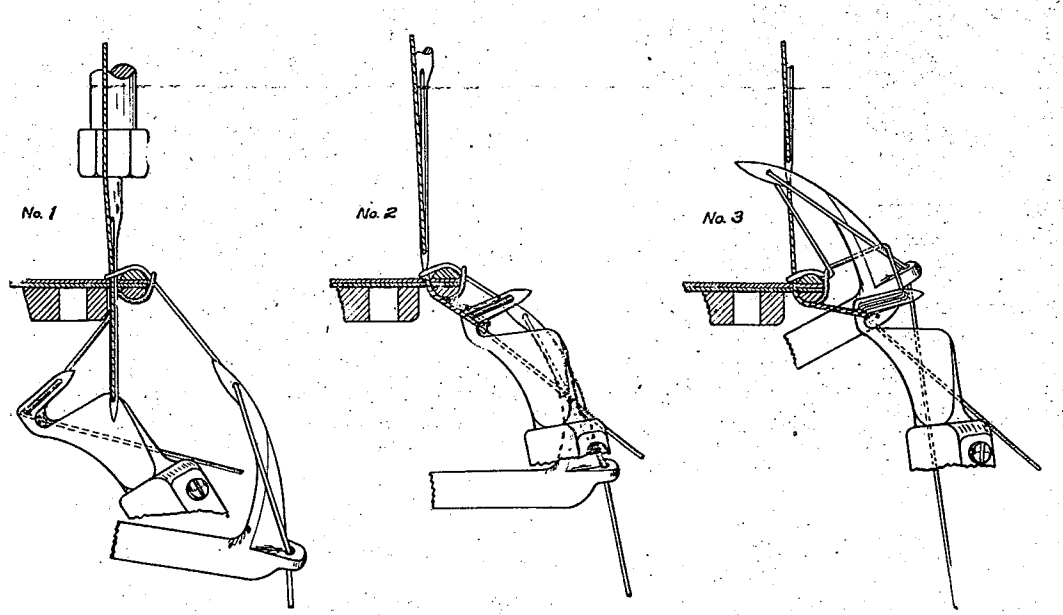

The long looper, during the continued dwell of the short looper and while the needle is completing its upward stroke, moves upwardly over the edge of the fabric until its looper eye has passed to the left of the needle a distance sufficient to allow the needle in its descent to pass between the looper and its thread which extends rearwardly from the looper eye.

From the library of: Diamond Needle Corp

GROUPING OF MACHINES

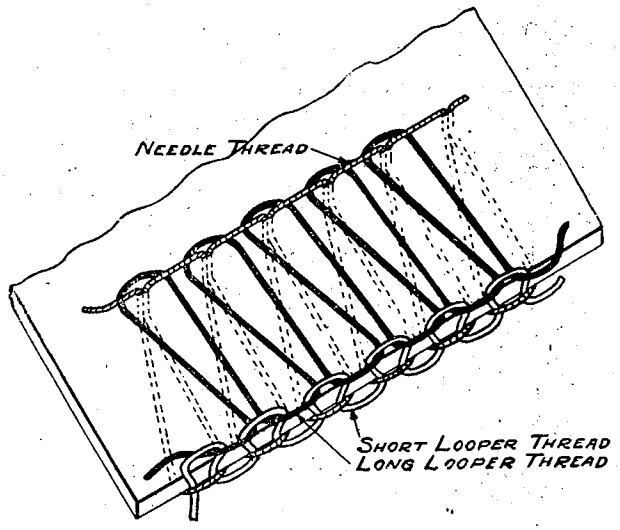

The 3-thread elastic, or "Square-edge" stitch, is shown in the perspective view above and is especially adapted for edge finishing. In making this stitch, the long looper when returning leaves its thread loop around the needle thread loop on the upper face of the fabric, and in interlocking relation with the short looper thread loop along the upper corner of the edge of the fabric. The short looper thread also interlocks with the needle thread loops along the lower corner of the edge of the fabric, the needle thread loops extending along the underface of the fabric to the edge.

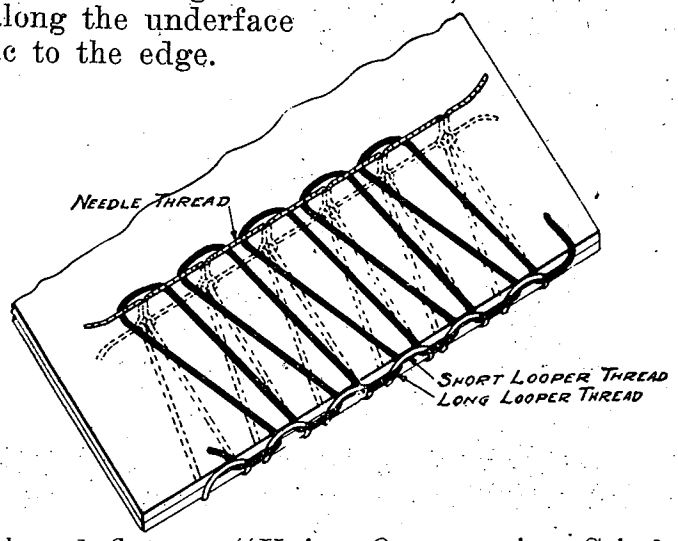

The 3-thread flat, or "Union Overseaming Stitch," which is especially adapted for flat seaming, is shown in the perspective view above, and is formed in the same general manner, but by different thread controlling devices. In this stitch the needle thread loops are not drawn over to the edge. The short looper thread on the under-face and the long looper thread on the upper face are interlocked with each other along the middle of the edge, thus making a decidedly "flat" stitch.

Clean and Oil Machine AT LEAST ONCE Every Day

From the library of Diamond Needle Corp.

GROUPING OF MACHINES

This same stitch construction may be slightly changed by varying the respective tensions of the different threads, so as to position the "locking" point of these threads either along the upper or the lower corner of the edge.

Group 2 As the needle begins to rise, it throws out a loop of needle thread at the rear of the needle, and simultaneously the short looper moves to the right and into the needle thread loop. As soon as the short looper reaches the path of travel of the long spreader it is given a decided dwell, and the long spreader then engages the looper thread loop.

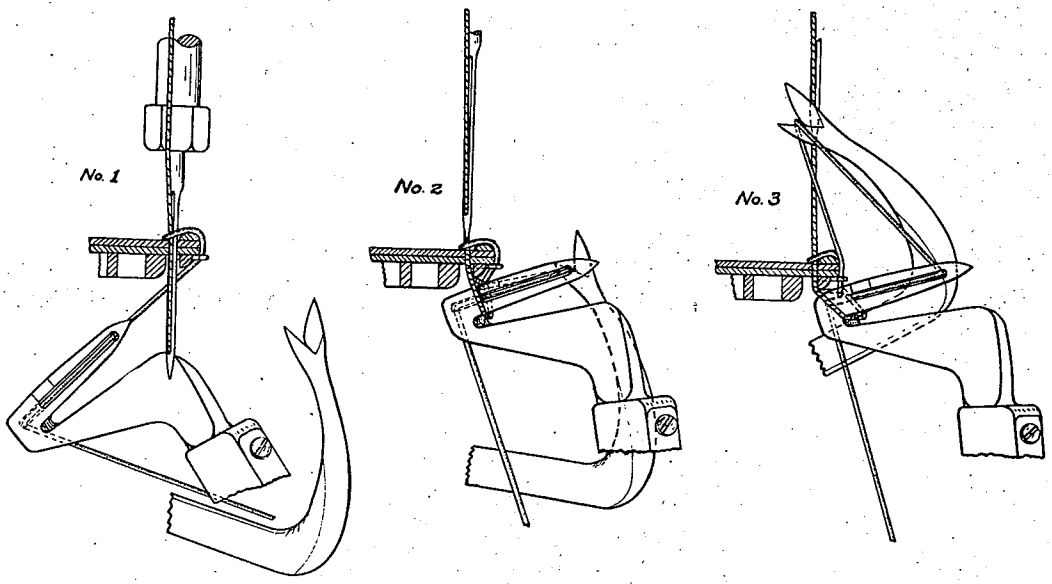

The long spreader during the continued dwell of the short looper and while the needle is completing its upward stroke, moves upwardly over the edge of the fabric until the crotch has passed to the left of the needle a distance sufficient to allow the needle in its descent to enter the loop of looper thread held by the spreader. When the long spreader returns, it leaves the looper thread loop around the needle thread loop and on the upper face of the fabric, and in interlocking relation with the needle thread loop (which has been shed by the short looper and which extends along the underside of the fabric) along the edge of the fabric.

Clean and Oil Machine AT LEAST ONCE Every Day

From the library of: Diamond Needle Corp

GROUPING OF MACHINES

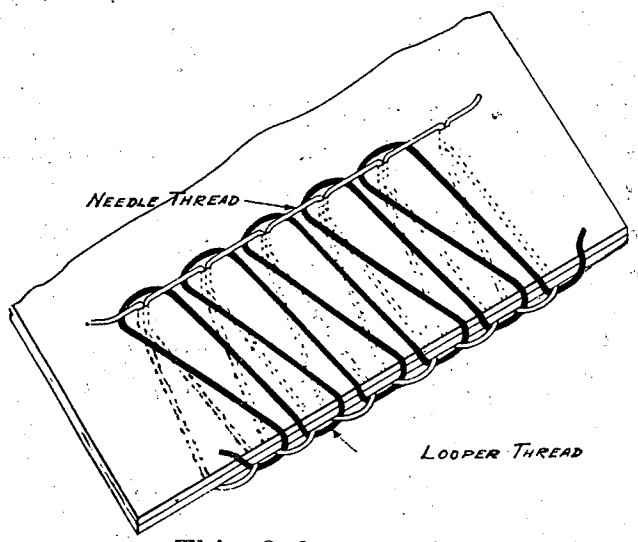

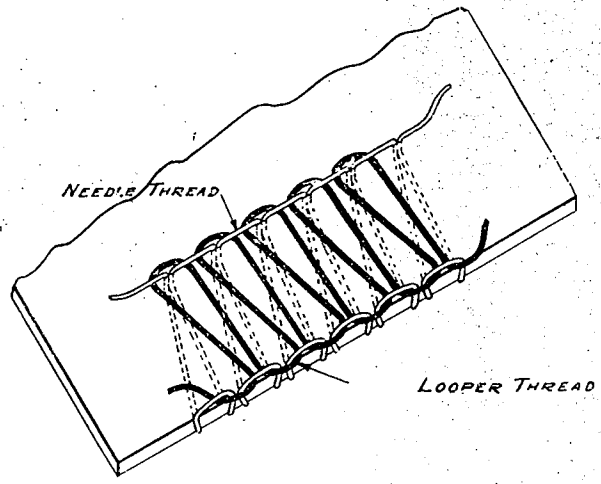

This 2-thread stitch-forming mechanism is adapted for flat seaming and edge finishing work and the "locking" point may be positioned along either the lower or upper corner of the edge, as shown in the above illustrations, or it may, of course, be positioned along the middle of the edge. The desired position is determined by the relative tensions applied to the threads.

Group 3 As the needle begins to rise, it throws out a loop of needle thread at the rear of the needle, and simultaneously the short spreader moves to the right and into the needle thread loop. As soon as the short spreader reaches the path of travel of the long looper it is given a decided dwell and the long looper then enters the needle thread loop which is engaged by the spreader.

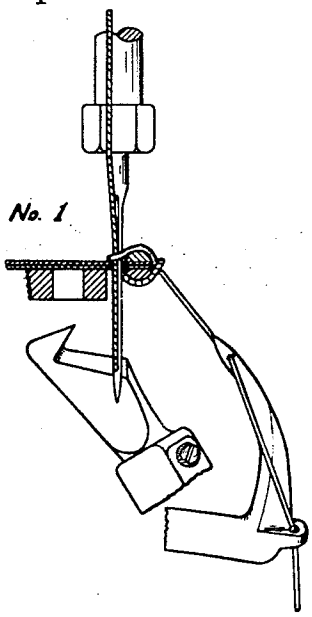

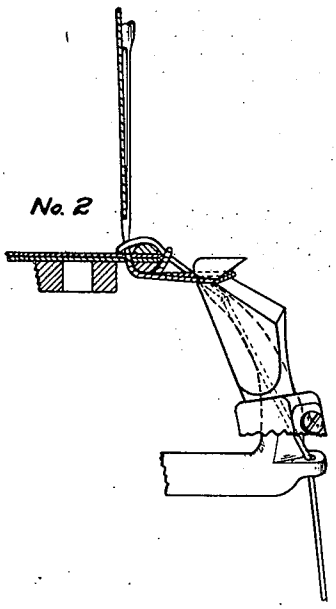

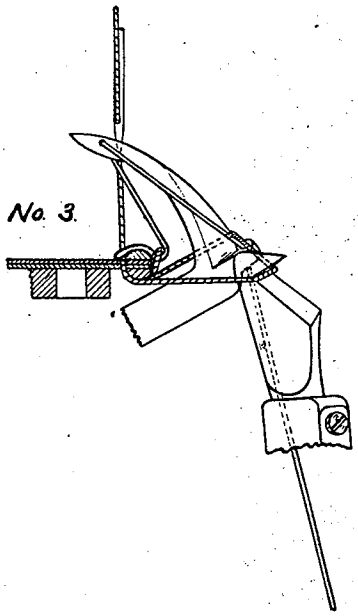

Clean and Oil Machine AT LEAST ONCE Every Day

From the library of Diamond Needle Corp

GROUPING OF MACHINES

The long looper, during the continued dwell of the spreader and while the needle is completing its upward stroke, moves upwardly over the edge of the fabric until the looper eye has passed to the left of the needle a distance sufficient to allow the needle in its descent to pass between the looper and its thread which extends rearwardly from the looper eye. When the long looper returns, it leaves its thread loop around the needle thread loop and on the upper face of the fabric, and in interlocking relation with the needle thread loop (which has been shed by the short spreader and which extends along the underside of the fabric) along the edge of the fabric.

This 2-thread stitch forming mechanism is adapted for edge finishing or flat seaming, and the resultant stitch constructions are identical with the constructions illustrated in connection with Group 2, see page 10.

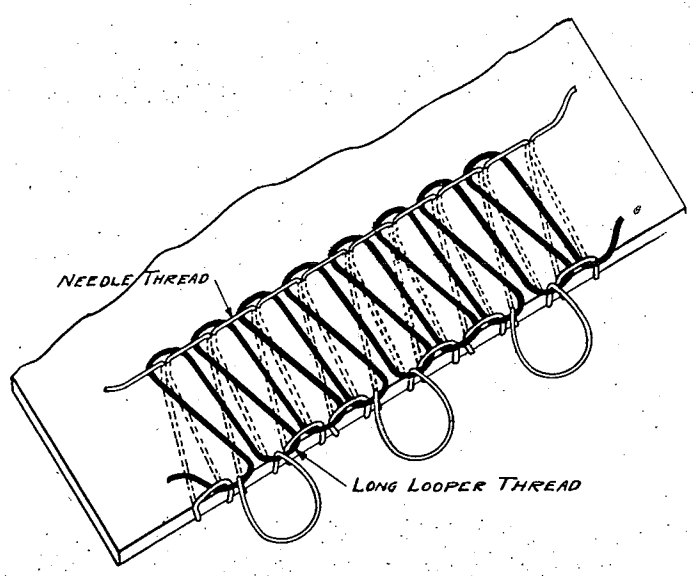

In each of Styles 15400 AH and 15500 G however, there is provided a mechanism which directly co-operates with every third needle-thread loop to form "Picot" loops as illustrated above. Picot machines 15400 AJ and 15500 H are each provided with a cam-controlled mechanism for varying the spaces between the picots and for arranging the picots in spaced groups.

Clean and Oil Machine AT LEAST ONCE Every Day

From the library of: Diamond Needle Corp

WIDTHS OF SEAMS

In each of the machines of class 15400, the width of the stitch tongue on the throat plate and the distance between the needle and the cutting edges of the trimmer knives is what determines the width of the seam produced on each style of machine. The lower trimmer knife can be adjusted laterally for a limited extent to vary the width of the seam. In each of the machines of classes 15500 and 15600, the width of the stitch tongue only is the determining factor.

FELLED SEAMS

In certain classes of work it is desirable further to conceal the trimmed edge. In Style 15400 X, the throat plate is provided with an upwardly extending curved lip for turning the fabric edge upwardly and over. In Styles 15400 AG, AH and AJ, and in 15500 G and H, each presser foot is provided with a downwardly extending curved lip for turning the fabric edge downwardly and under. In each case, the fell is positively formed in a uniform manner throughout the length of the seam.

SEAMS WITH RE-ENFORCING TAPE

In some classes of work, it is desirable to run a re-enforcing tape in the seam and thereby prevent the seams from stretching lengthwise.

In the seam produced by the 15400 H machine, the tape is positioned along the upper surface of the upper fabric. It is secured to the fabrics by the needle thread, and is covered by the long looper thread as illustrated below.

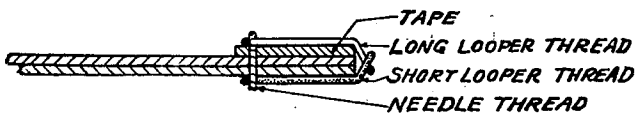

Clean and Oil Machine AT LEAST ONCE Every Day

From the library of: Diamond Needle Corp

SEAMS WITH RE-ENFORCING TAPE

In the seam produced by the 15400 X machine, the tape is positioned in the same manner as above noted. In this seam, however, the trimmed edges of the fabrics and the tape are turned upwardly and slightly extend over the tape, as illustrated below.

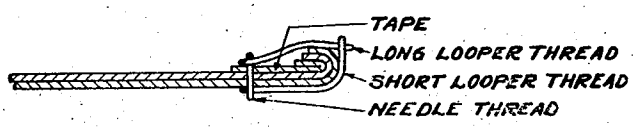

In the seam produced by the 15500 D machine, the tape is curved around the edge of the carpet as illustrated herebelow, and is covered by the short looper thread and the needle thread. The tape is not secured by the needle thread.

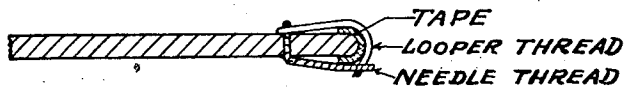

In the seam produced by the 15500 F machine, the tape is positioned along the upper surface of the upper fabric between the needle thread and the edge of the fabric and is covered by the long looper thread as illustrated herebelow. The tape is not secured by the needle thread.

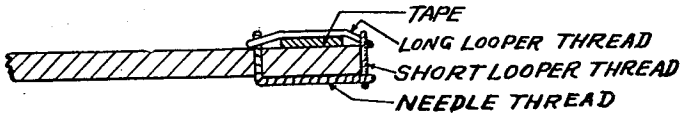

From the library of: Diamond Needle Corp

INSTALLATION

Sewing Machine Before leaving our factory, every machine is thoroughly tested; all parts and attachments are assembled, and the machine is actually put through the sewing operation to insure the proper working of the machine before being shipped.

Table Any table of ordinary construction may be used. Experience has demonstrated that the most convenient height for a table is 29 inches from the floor to the bottom of the table. If an opening has been cut in the table to accommodate another machine, it should be tightly fitted with a piece of thoroughly seasoned lumber of a corresponding thickness. The walls of the opening should be beveled in order to obtain a solid support for the insert, or suitable cleats should be screwed to the underside of the table to support the insert.

Machine Pulley Each sewing machine is fitted with a solid pulley No. 15421, having a diameter of 2½ inches.

Line Shaft Pulleys Line shaft pulleys are each made with a 1½ inch face, and with a $1\frac{3}{16}$ inch bore. In cases where the line shaft diameter is greater than $1\frac{3}{16}$ inches, it will be necessary for the pulley to be bored to fit. The diameters of the pulleys vary in inch sizes and include 6-8-9-10-12-13-14 and 15 inch diameters.

Transmitter Pulleys The transmitter includes two loose pulleys, which are formed in one piece so as to move together, and a brake pulley. The diameters of the loose pulleys are 5¾ inches and 3¾ inches respectively. The diameter of the grooved pulley is 7 inches. A larger grooved pulley, 10 inches in diameter, No. 28518, can be furnished when it is found impossible to position a sufficiently large line shaft pulley, or when the speed of the line shaft is too low to give the desired speed to the sewing machine.

Belts A 1-inch flat belt must be used to transmit power from the line shaft pulley to either of the loose pulleys of the transmitter, and a round belt (preferably $\frac{9}{32}$ inch in diameter), must be used to transmit power from the grooved pulley of the transmitter to the sewing machine pulley. The sewing machine pulley must

From the library of Diamond Needle Corp

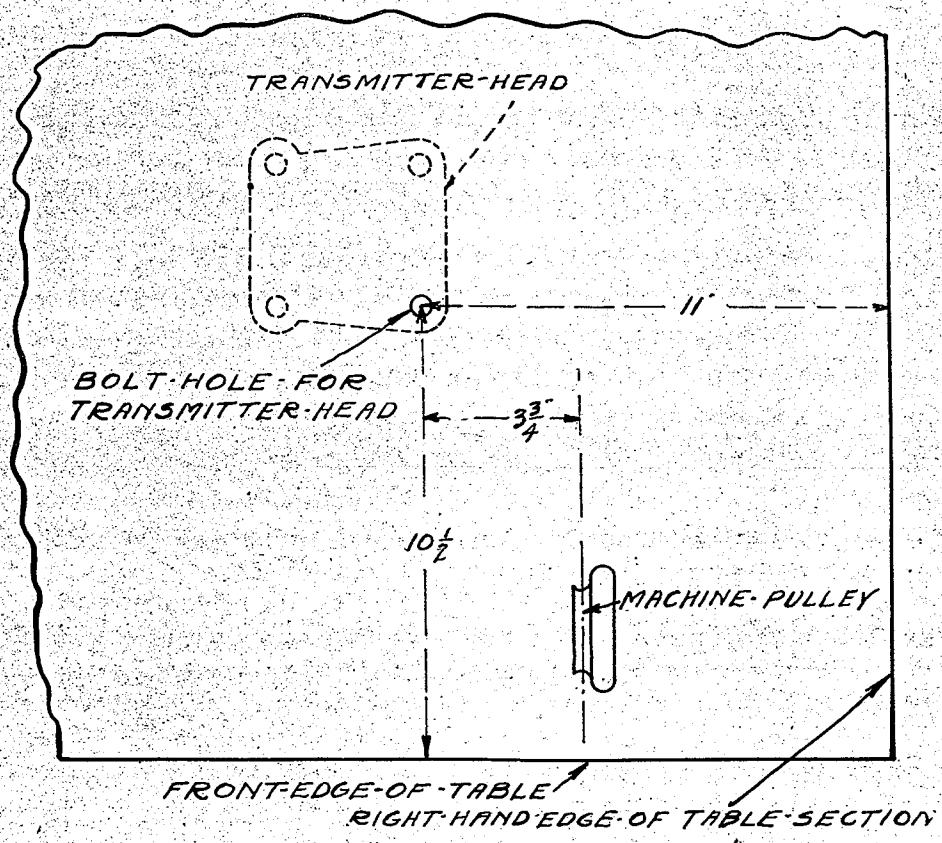

turn in a direction away from the operator. If necessary to cross the belt in order to obtain this direction of travel, the round belt should be crossed.

Fastening Transmitter to Table The transmitter should be placed under the table and far enough back to avoid the operator's clothing, and also to avoid the chain which connects the foot treadle with the presser foot lever. The majority of these machines, however, are not equipped with these foot treadles.

Bore a ¼ inch hole at a point 10½ inches from the front edge of the table and 11 inches from the right-hand edge of the table section. Insert a ¼-2½ inch flat head stove bolt into this opening. Position the transmitter under the table so as to project the bolt through the front right-hand hole of the transmitter plate. Tighten this bolt securely.

Swing the transmitter frame to the rear as far as possible, by loosening the rear adjusting screw and tightening the front adjusting screw.

Place pulley on the line shaft, but do not tighten it so that it cannot be held against rotation.

Clean and Oil Machine AT LEAST ONCE Every Day

From the library of: Diamond Needle Corp

INSTALLATION

Measure the length of flat belt required to go around the line shaft pulley and the desired loose pulley of the transmitter. Join the two ends of the flat belt with one of the malleable iron belt lacings. Drive the lacing into one end of the belt, place the belt over the two pulleys so that the ends meet on the transmitter pulley, and drive the lacing into the opposite end of the belt. See that the lacing conforms to the curve of the pulley and that the teeth of the lacing are tightly clinched. Align the shaft pulley with the desired transmitter pulley and lock the former on its shaft. Turn the pulleys by hand, swinging the transmitter on its supporting bolt until the belt runs true on the pulleys. Then permanently secure the transmitter to the table by using 1¼ inch No. 12 flat head wood screws in the remaining holes of the transmitter plate.

Regulating Flat Belt Tension

The adjustment for regulating the tension on the belt is exceedingly simple. It is only necessary to loosen one adjusting screw and tighten the other. Always see that both screws are tightened after any change has been made. A tension barely sufficient to drive the machine at full speed is all that is required. Additional tension will cause unnecessary wear on the belt, and the bearings will run hot. When the flat belt is shortened, it is advisable to swing the transmitter to the rear as far as possible in order for the transmitter to have the maximum take-up adjustment for future service.

Fastening Machine to Table

An iron base plate, No. 21680, which is placed under the machine, has three points of table contact, to counter-act any unevenness of the table. The plate is provided with a groove around its edge to receive the surplus oil from the machine. It is also provided at its rear right hand corner with a pin for holding the machine against turning.

The distance from the front edge of the table to the front edge of the base plate varies according to the sewing operation and the width of the table. A distance of 2½ inches will generally be satisfactory.

Measure 3¾ inches to the right from the center of the bolt which secures the transmitter to the table and draw a line at right angles to the front edge of the table. The sewing machine should be positioned so that this line is in alignment with the center of the groove of the machine pulley. This position of the machine will insure the alignment between the groove of the transmitter pulley and the groove of the machine pulley.

Clean and Oil Machine AT LEAST ONCE Every Day

From the library of Diamond Needle Corp

INSTALLATION

After locating the base plate as desired, mark the table through the $\frac{7}{16}$ inch hole of the plate, remove the plate, and bore a $\frac{7}{8}$ inch hole through the table. Replace the plate, position the machine on the plate, and fasten them to the table by the bed screw, the screw passing upwardly through the holes in the table and base plate, and into a threaded hole in the machine bed.

Caution Before permanently fastening the machine to the base, the SURFACES of both MUST BE CAREFULLY CLEANED to prevent the main shaft from being sprung and the resultant heating of its bearings.

Belting Sewing Machine to Transmitter To locate the holes in the table for the round belt, it will be found of great assistance to use a pointed ¼-inch rod. By placing it in the groove of the machine pulley, the slant, which the round belt requires, also the centers for the holes, can be accurately located on the upper surface of the table. The diameter of each hole should not exceed one inch. If the holes are slightly elongated, a wider range of adjustment on the pivoted frame can be secured.

Transmitter Treadle The transmitter treadle should be set so that the center is directly under the needle. The front edge should be about one inch in front of the needles, but this distance may be varied according to the operation for which the machine is to be used. The treadle adjustment, to which the pitman rod is attached, is reversible and should be placed so that the pitman rod will stand as nearly vertical as possible. The treadle bracket having the open slot, should be farthest away from the pitman. By adjusting the length of the pitman rod, the incline of the treadle can be made to suit the operator's convenience.

Foot Lift Treadle This is a device which is furnished with some styles of machines for raising the presser foot by the operator's foot. It consists of a small foot treadle and supporting bracket, No. 29042, and a chain, No. 421.

This foot lift treadle should be placed on the floor on the right hand side of the transmitter treadle, and arranged at an angle thereto. The chain is connected at one end to the presser foot lever on the sewing machine, the chain passing through an opening bored in the table for this purpose.

Clothing Guard A guard is provided to be fastened to the table in front of the transmitter pulley, to protect the operator's clothing.

Clean and Oil Machine AT LEAST ONCE Every Day

From the library of: Diamond Needle Corp

OILING MACHINES

Sewing machines require careful oiling with a good quality of oil that will not gum by friction, heat or air exposure. The so-called "stainless" oils are not recommended for our high speed machines, as they do not have sufficient viscosity to serve the purpose.

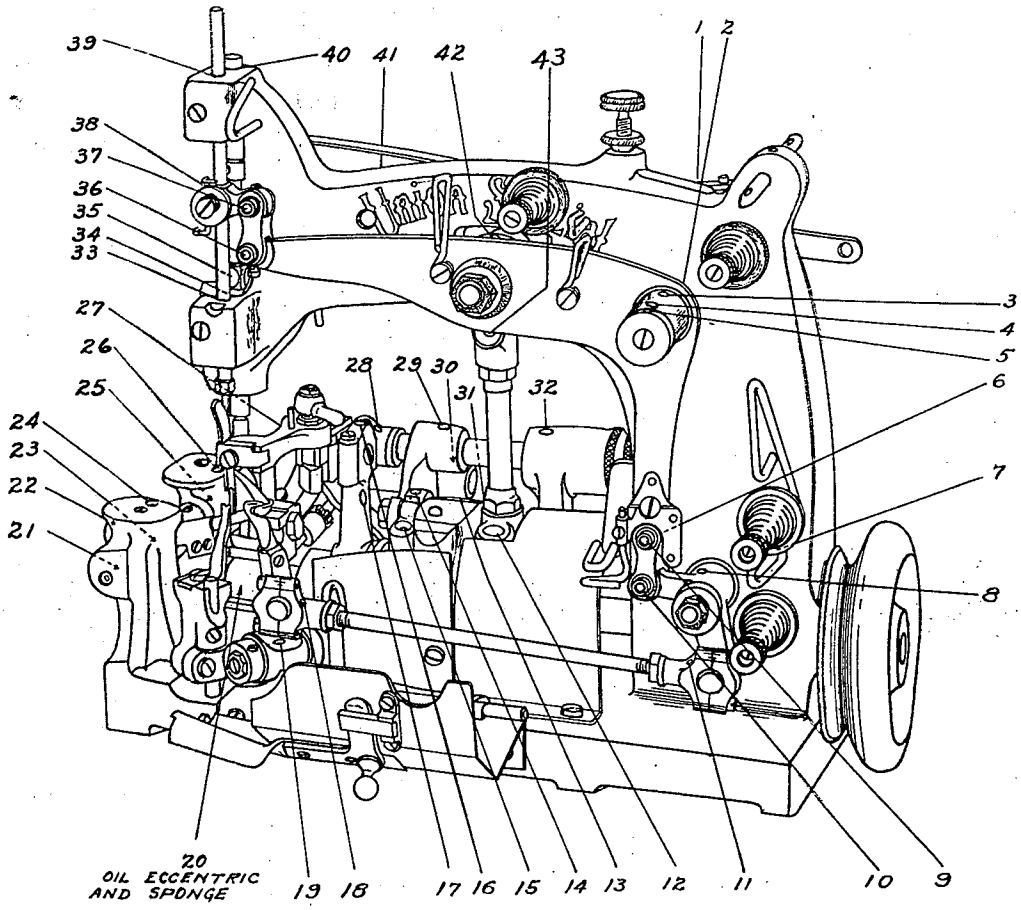

CLASS 15400 Machine

Reference to the perspective drawings will show the oiling places for each class of machines. The oiling places are numbered, and we recommend that they be followed consecutively. EVERY OILING PLACE CAN BE REACHED WITHOUT REMOVING THE CLOTH PLATE. It is very plain that some lubricant should be used wherever one working part rubs against another. Each end of the needle lever is fitted with hollow link pins having ball valves. These are oiled by pressing the ball with the oil can spout. The sectional needle lever connection near the middle of the machine,

From the library of Diamond Needle Corp.

has an oil reservoir for lubricating the lower bearing. A liberal quantity of oil should be poured into the reservoir from the upper end of the connection which is numbered 43 in the 15400 oiling diagram.

When systematically performed, oiling can be done without a possibility of missing any place, and in a surprisingly short time.

Frequent oiling is necessary, as lint quickly absorbs the oil. It is recommended that the sewing machine head be given a thorough oiling four times a day.

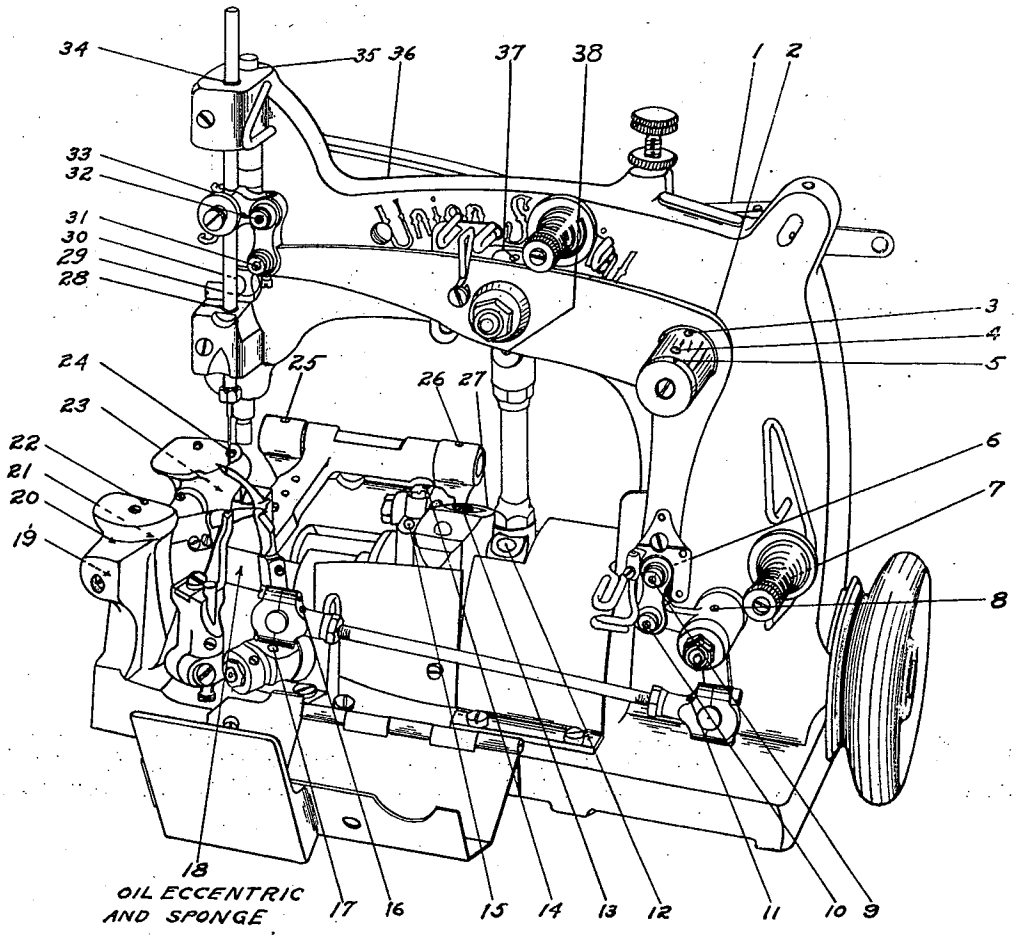

CLASS 15500 Machine

Clean and Oil Machine AT LEAST ONCE Every Day

From the library of: Diamond Needle Corp

OILING MACHINES

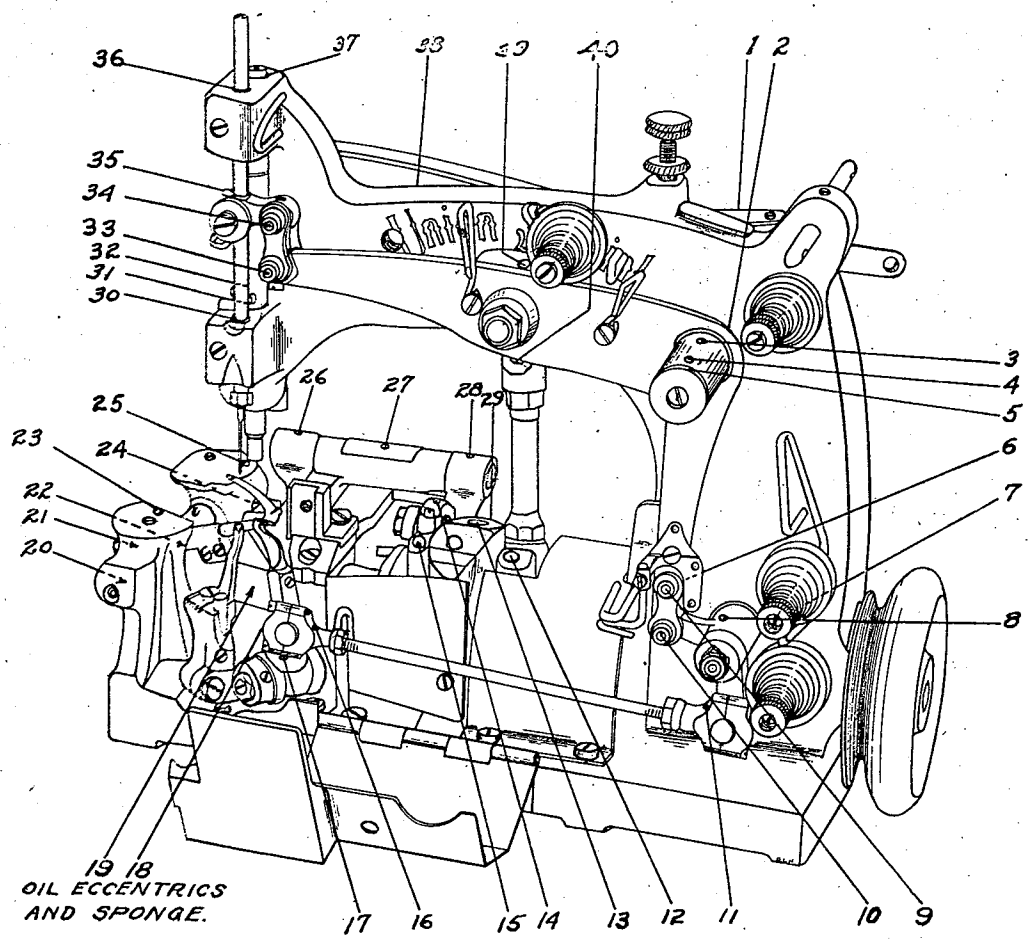

CLASS 15600 Machine

Clean and Oil Machine AT LEAST ONCE Every Day

From the library of: Diamond Needle Corp

TRANSMITTER

Lubricating Transmitter

This is accomplished with solid oil, forced through the hollow main shaft from a single compression cup, which should be screwed up about once a week. If the bearings run hot, the compression cup should be screwed up immediately. Refilling will not be required oftener than once a month.

Use only a high-grade solid oil having the proper consistency and liquifying at about 150 degrees Fahrenheit. This is of great importance, as the oil should remain solid until it leaves the interior of the shaft. A softer grade is liable to feed too fast and to drip from the bearings. A harder grade is liable to clog the feed holes in the shaft.

The use of the cheaper grades of solid oil can only result in injury to the bearings. "No. 3 Arctic Cup Grease" will be found suitable. This can be obtained from the leading oil dealers, or will be promptly furnished by us in convenient five-pound pails.

The shaft is provided with feed holes for the proper distribution of the oil. Grooves are cut in the ball-retaining rings, which allow the oil to flow into the ball races.

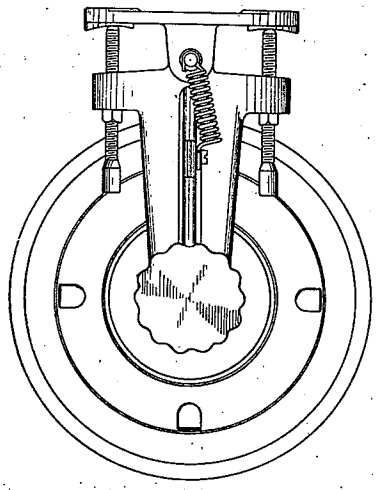

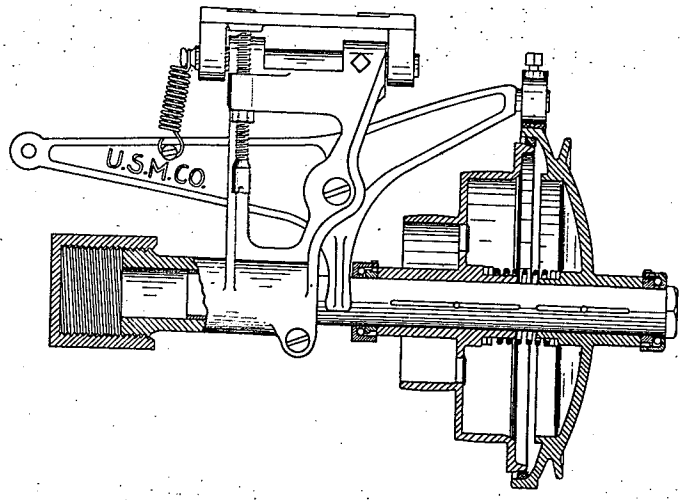

Cleaning Transmitter

The transmitter shaft can be cleaned from end to end by unscrewing the cup and plug which close the two ends. Should the transmitter be taken apart for any reason, it is advisable to remove the balls from the ball races, and to wash thoroughly all the pieces; if an imperfect ball be found, it should be replaced with a new one. The ball races should then be refilled with the transmitter lubricant.

Clean and Oil Machine AT LEAST ONCE Every Day

From the library of: Diamond Needle Corp.

Assembling Transmitter

A spiral spring encircles the inside pulley hubs to force the pulleys apart when the pressure on the treadle is released. To avoid unnecessary wear, two wood fiber washers are placed at each end of the spring.

Care should be taken to see that the shaft is turned so that the oil holes are toward the line shaft pulley. In line with the oil holes, a notch is ground in the shaft plug so that the holes can be readily located after the transmitter has been assembled.

The lateral movement of the loose pulley on the shaft, as it engages and releases the brake pulley, should be reduced as much as possible. A very little movement is required to stop the machine when the pressure on the treadle is released. Any additional movement will necessitate an increased treadle motion and cause the flat belt to run off the pulley. The adjustment is made by sliding the shaft in the bracket.

From the library of Diamond Needle Corp

ADJUSTING THE STITCH FORMING DEVICES

Important When adjusting these machines, the devices should be adjusted in the order noted below. This will insure the proper co-operation of the devices in the shortest possible time.

1. The needle.
2. The needle bar.
3. The long looper or long spreader.
4. The short looper or short spreader.

Needle The needle has a short groove and a long groove. The short groove merges with the scarf or spot which is milled just above the eye. The long groove extends from the shank to the eye. Place the shank of the needle as far as possible into the needle bar with the LONG GROOVE TO THE FRONT AND TURNED A TRIFLE TO THE LEFT.

Needle Bar The needle bar should be set so that the needle eye is slightly below the point of the short looper (or spreader) when the latter is moving into the needle thread loop. This relation may be varied, but care should be taken to avoid setting the needle eye too far below the point of the looper as this will cause the needle to throw out too large a loop which will be unsteady for the looper to enter with certainty.

Long Looper or Long Spreader A new needle should always be used when making this adjustment. The holder is clamped to the inclined rock shaft, and the long looper (or spreader) is secured in the holder by screws. The long looper (or spreader) should pass in front of and barely clear the needle, and the looper eye or spreader crotch, should be about 5/64 inch to the left of the needle when at the extreme left end of its travel. This adjustment may be made by re-setting the holder about its inclined shaft.

Short Looper or Short Spreader Gauge This gauge is the distance between the center of the needle and the point of the short looper (or spreader), when the latter is at the beginning of its forward stroke, and may be ascertained by using looper gauge No. 21225, as shown in the illustration on the following page.

From the library of: Diamond Needle Corp

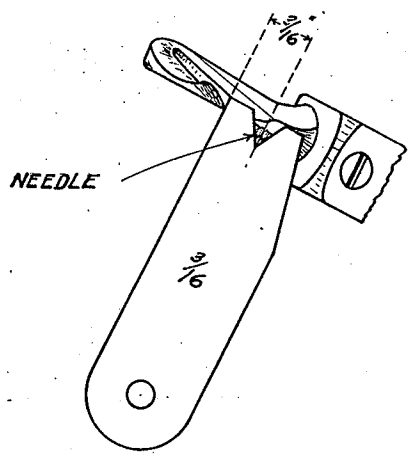

Short Looper or Short Spreader

The holder for the short looper or spreader is mounted on a plate which in turn is pivoted to the bed, the pivot being located directly under the needle. The holder is mounted on the plate whereby it may be shifted forwardly or rearwardly on said plate to cause the short looper (or spreader) to pass close to the back of the needle. The plate should be adjusted about its pivot to swing the short looper (or spreader) so that it will pass in front of the long looper (or spreader) when the latter is moving upwardly. This swinging adjustment however, does not disturb the first mentioned adjustment.

The short looper (or short spreader) is then adjusted to the required gauge by turning the looper holder connection rod. The SHORT LOOPER during its forward movement must pass the long looper at a time when the point of the long looper is moving upwardly in a path about $\frac{1}{16}$ inch in rear of the front thread eye of the short looper. See Fig. 2, page 8. The timing of the short looper and long spreader is the same as above. When a SHORT SPREADER is employed the point of the long looper must move upwardly in a path directly in rear of and to the left of the spreader as shown in Fig. 2, page 11. To obtain this co-operative relation between the short looper (or spreader) and the long looper (or long spreader), it may be necessary either to shorten or lengthen the needle lever connection, thus moving the short looper, (or spreader) to the right or left. This last adjustment destroys the original looper (or spreader) gauge. The short looper (or spreader) must then be reset to the proper gauge.

From the library of: Diamond Needle Corp

COMBINED THROAT-PLATE CENTER SUPPORT, NEEDLE GUARD, THREAD GUARD, AND LOWER KNIFE SUPPORT

This device is located under the right hand side of the throat-plate and slightly in front of the stitch finger. A holder is supported by the vertical supporting stud, which supports the lower knife bar, and the lower end is split to form a clamp which may be tightened about the stud by a clamping screw. After the stud has been vertically adjusted relative to the knife bar, it should be locked by a screw mounted in the bed plate. A locking screw is employed to positively lock the holder against any turning movement. The combined throat-plate support, needle guard, and thread guard is adjustably secured to the holder by a slot and screw connection, whereby the same may be adjusted towards or from the needle. The upper end of the support is grooved in its rear face to receive the needle.

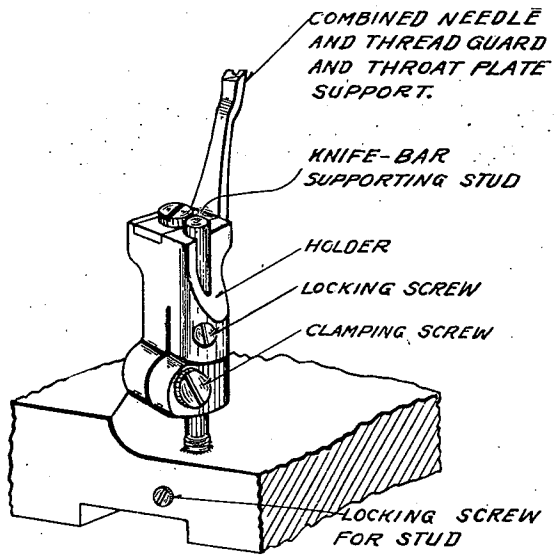

This device is used with throat-plates 2-11/32 inches in length and serves to prevent the center of the plate from being forced downwardly when struck by the needle; to force the needle thread loop rearwardly so that the same will be entered with certainty by the short looper or spreader; to guard the needle against vibrating while the short looper or spreader is entering the needle-thread loop, and also to prevent the needle in its descent from entering or interfering with the loop of needle thread around the short looper.

Clean and Oil Machine AT LEAST ONCE Every Day

From the library of: Diamond Needle Corp

COMBINED THROAT-PLATE CENTER SUPPORT, NEEDLE GUARD, THREAD GUARD, AND LOWER KNIFE SUPPORT

In making this adjustment, tighten the cloth plate firmly to the machine, and the throat-plate firmly to the cloth-plate; loosen the screws of the holder and turn it until the groove in the support is in front of the throat plate needle hole. Then force the holder upwardly until the support bears against the under side of the throat plate. Slightly tighten the holder clamp screw. Take off the cloth plate, and set the guard so that its groove registers accurately with the needle, and its rear face is close enough to the short looper or spreader to barely pass two thicknesses of newspaper.

In tightening the holder, first tighten the locking screw to prevent the holder from swinging on the stud, and then tighten the clamping screw.

From the library of: Diamond Needle Corp

PLAIN FEED DOG MECHANISM

This type of feeding mechanism is embodied in machines of the following styles: 15400 S, AH, AJ; 15500 A, D, G and H.

The feed dog is a single dog which is always level. It obtains its up and down movements from the feed lift eccentric and its backward and forward movements from the feed rocker, both movements being fully described in connection with the top feeding mechanism, page 32.

TILTABLE FEED DOG MECHANISM

This type of feeding mechanism, which is illustrated here below, is embodied in machines of the following styles: 15400E, F, H, J, L, N, Q, X and AG.

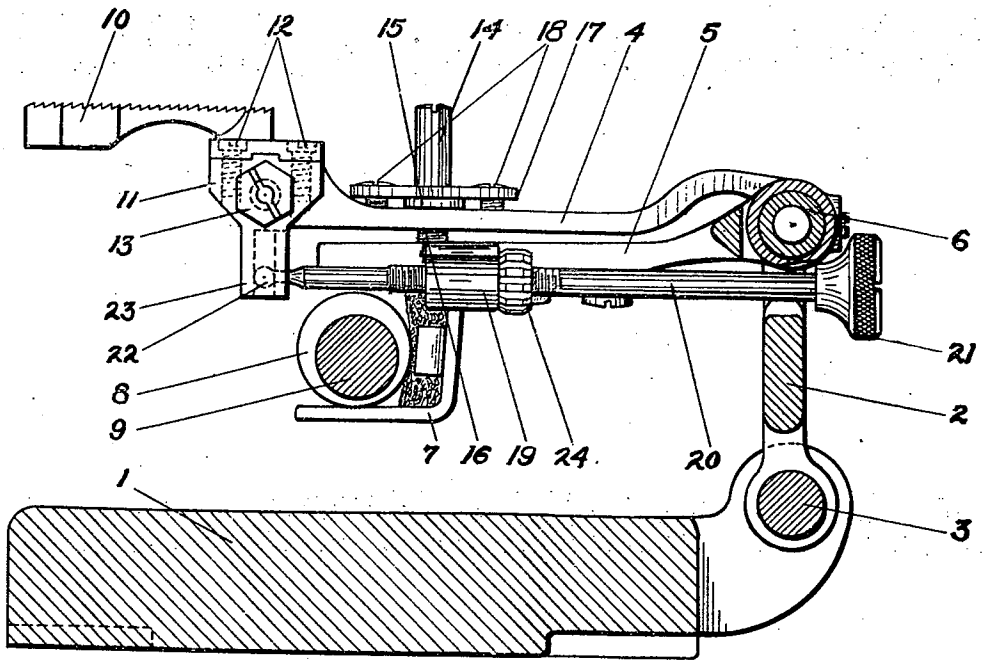

From the library of: Diamond Needle Corp

TILTABLE FEED DOG MECHANISM

On the base plate 1, a feed rocker 2 is pivotally connected as at 3 and a feed bar which consists of upper and lower sections, 4 and 5 respectively, is pivotally connected to the upper end of the feed rocker by a pin 6. The lower feed bar section has an eccentric shoe 7, which co-operates with a feed lift eccentric 8, carried by the main shaft 9.

A solid feed dog 10, which may be adjusted laterally, is mounted on a carrier 11 by the screws 12. The carrier 11 is pivotally connected as at 13, to the upper feed bar section 4.

The feed bar sections 4 and 5 are held together by an adjusting screw 14, which has a collar 15 fixed thereon. The lower part of screw 14 is threaded as at 16, and fits a threaded opening in the lower feed bar section 5.

A plate 17, having an opening through which the upper end of screw 14 projects, is held against collar 15 by the screws 18. By loosening said screws 18 and turning adjusting screw 14 to the right or left, the feed bar section 4 and consequently feed dog 10 may be raised or lowered. Care should be taken, after adjustment is completed, to tighten screws 18 which draw plate 17 and upper feed bar section 4 against the upper and lower faces of collar 15, thereby locking screw 14 against further movement.

The lower feed bar section 5 is provided with a threaded lug 19 and an adjusting rod 20 extends through this lug to the rear of the machine, and is provided at its rear end with a suitable knurled knob 21. The other end of the rod has a ball 22 which fits into a groove in the arm 23 depending from the carrier 11. A lock nut 24 is threaded on the rod 20 adjacent the rear side of the lug 19 and is used for locking rod 20 against further movement.

To adjust the feed dog 10 to a tilting position the lock nut 24 must first be loosened, to permit the adjusting rod 20 being turned to the right or left, as desired. By inclining the feed dog so that the front end thereof is higher than the rear end, the material being sewed will be gathered. By inclining the feed dog in the opposite direction, the material will be stretched. In either adjustment care should be taken to see that the feed dog, in its downward movement will pass below the top surface of the throat plate; otherwise it will tend to drag the material on its return movement. After adjustment has been completed special care should be taken to SEE THAT THE LOCK NUT 24 IS SECURELY TIGHTENED against the lug 19.

From the library of: Diamond Needle Corp.

DIFFERENTIAL FEEDING MECHANISM

This type of feeding mechanism, which is illustrated here below, is embodied in machines of the following styles: 15400A, C, D, G, M, P, R, T, U, W, AA, AB, AC, AD, AE, AF; 15500 C, E and F.

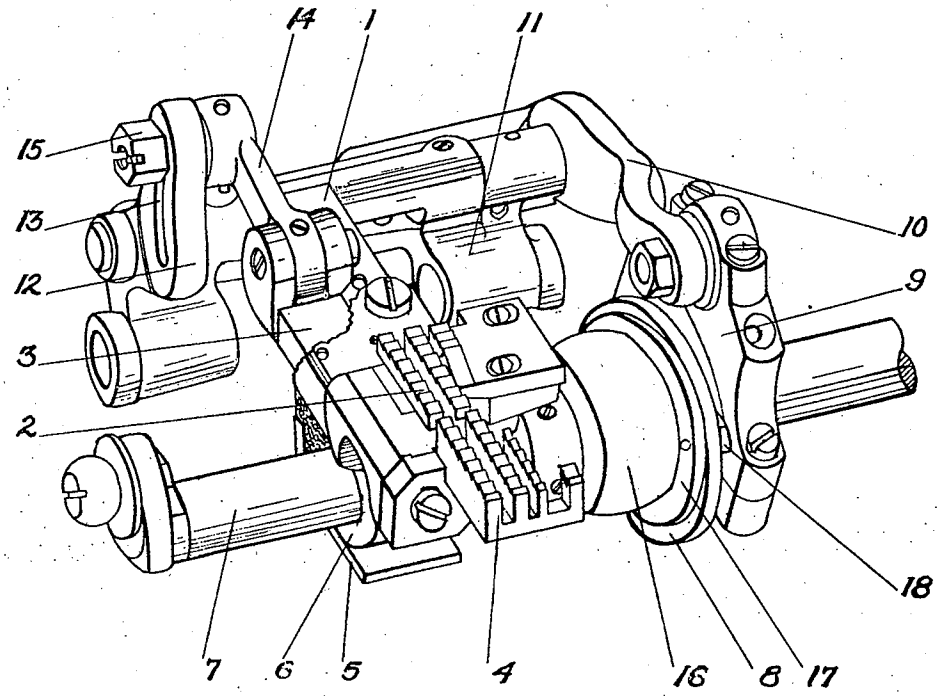

The main feed bar 1 carries a main feed dog 2, and the differential feed bar 3 carries the differential feed dog 4. The main bar is provided with a shoe 5 which co-operates with a feed lift eccentric 6 mounted on the main shaft 7. Inasmuch as the differential bar 3 slides on the main bar 2, both bars will move up and down in unison and from the single eccentric 6.

The main feed bar 1 is given its backward and forward movements by means of an eccentric mounted on the main shaft 7, said eccentric having a flange 8. This eccentric, through the medium of the eccentric connection 9, and arm 10, oscillates the feed rocker 11, and to the upper end of said rocker is pivotally connected the rear end of the main feed bar 1. The feed rocker is pivotally connected at its lower end to bearing lugs carried by the machine bed.

Clean and Oil Machine AT LEAST ONCE Every Day

From the library of: Diamond Needle Corp

DIFFERENTIAL FEEDING MECHANISM

The differential feed bar 3 is given its backward and forward movements from a segmental arm 12 which is carried by and extends above the feed rocker 11. This arm is provided with an arcuate slot 13 to which one end of a link 14 is adjustably connected by a headed screw 15, the other end of the link being pivotally connected to the rear end of the differential feed bar 3.

The higher the screw 15 is adjusted in the slot 13, the more backward and forward travel (relative to the main feed dog travel) will be given to the differential feed dog. By lowering the screw to the bottom of the slot, both feed dogs will be moved in unison.

An eccentric 16 operates the trimmer, and this eccentric is spotted on the main shaft 7 and is provided with a flange 17 which bears against the eccentric flange 8. Two screws 18 pass through slots in the flange 8 and into the flange 17. By loosening these screws the flange 8 and eccentric fixed thereto, can be turned to vary the swinging movements of the feed rocker, and thereby vary the feed strokes of the feed bars. After the desired length of stitch has been thus obtained, the amount of travel of the differential feed dog should be adjusted. Be sure to tighten the adjusting screws 15 and both screws 18.

From the library of Diamond Needle Corp

TOP FEEDING MECHANISM

This type of feeding mechanism, which is illustrated here below, is embodied in machines of the following styles: 15600 A and B.

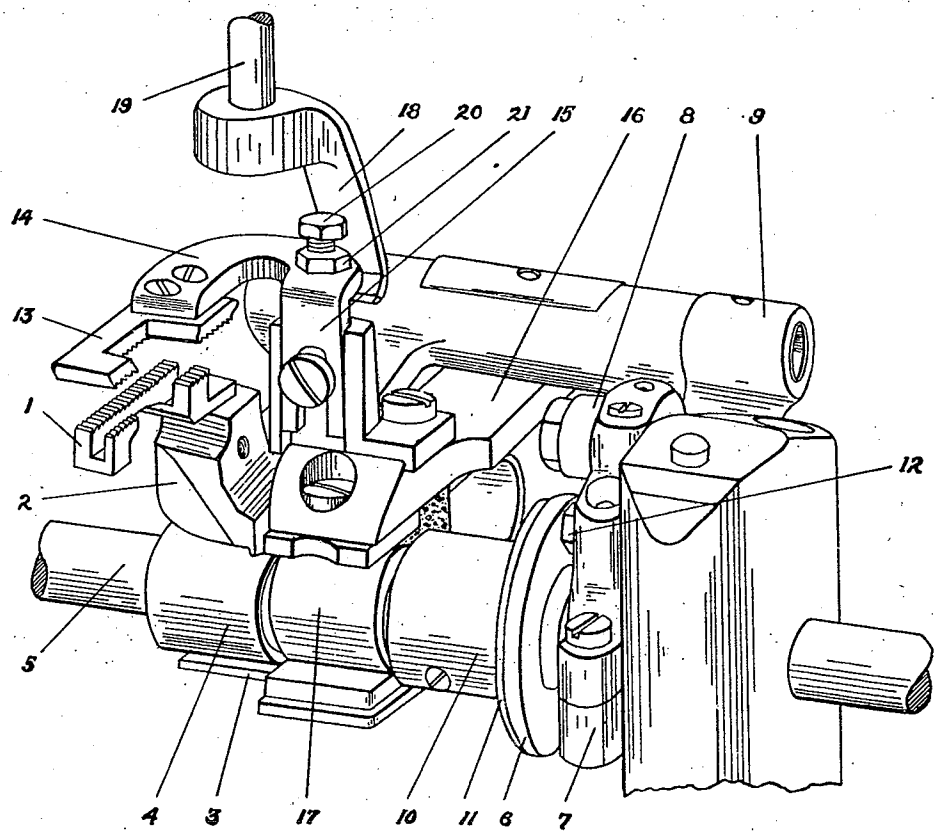

The bottom feed dog 1 is secured to the main feed bar 2, and this feed bar is provided with a shoe 3 which co-operates with a feed lift eccentric 4 mounted on the main shaft 5. This feed bar is given its backward and forward movements by means of an eccentric mounted on the main shaft 5, said eccentric having a flange 6. This eccentric through the medium of the eccentric connection 7 and arm 8, oscillates the feed rocker 9, and to the upper end of said feed rocker is pivotally connected the rear end of the feed bar 2. A collar 10 is fixed to the main shaft 5, and it is provided with a flange 11 which bears against the eccentric flange 6. Two screws 12 pass through the slots in the flange 6, and into the flange 11. By loosening these screws, the flange 6 and the eccentric fixed thereto, can be turned to vary the swinging movements of the feed rocker, and thereby vary the length of travel of the bottom feed dog.

Clean and Oil Machine AT LEAST ONCE Every Day

From the library of: Diamond Needle Corp

TOP FEEDING MECHANISM

A top feed dog 13 which co-operates with the bottom feed dog, is carried by a rearwardly extending arm 14 which terminates in a supporting shank 15. This shank is supported for vertical and horizontal adjustments on a feed bar 16 which is connected at its rear end to the feed rocker 9. Thus, the feed rocker gives equal and simultaneous backward and forward movements to both top and bottom feed dogs. The top feed dog is raised and lowered through the medium of a feed lift eccentric 17, formed integral with the eccentric 4 but set diametrically opposite thereto. As a result, when the bottom feed dog moves upwardly and downwardly the top feed dog moves downwardly and upwardly, thus simultaneously gripping, feeding and releasing both pieces of materials.

An arm 18, carried by the presser bar 19, projects below the arm 14. When the foot is raised for inserting or withdrawing the material, the arm 18 will engage the arm 14 and thereby lift the top feed dog, thus permitting the material to be manipulated.

A screw 20 on the arm 14, serves to limit the downward movement of the top feed dog relative to the feed bar 16, and a lock nut 21 serves to secure the screw in an adjusted position.

Care should be taken in adjusting the top feed dog. When the top feed dog is at its lowest position the bottom feed dog is at its highest position, and the teeth of the top feed dog should just CLEAR the teeth of the bottom feed dog. If the feed dogs are set so that they touch one another, they will chatter and thereby cause the teeth of both feed dogs to wear smooth, and also cause the machine to run hard.

From the library of Diamond Needle Corp

TRIMMING MECHANISM

(Class 15400 only)

This mechanism includes a stationary lower knife and a reciprocatory upper knife.

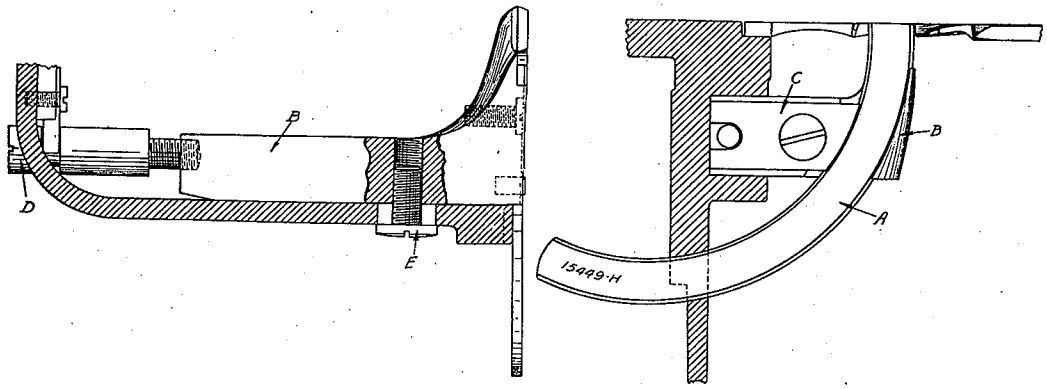

Lower Knife The lower knife A, is secured to a slidable bar B, by a clamp C. The knife can be adjusted laterally to slightly vary the width of the stitching, by the screw D, and locked in position by the clamping screws E. In some styles of machines a curved lower knife, No. 15449-H, is used, and in other styles a straight knife, No. 15449, is used. A wider straight knife, No. 15440A, is sometimes used. The curved knife has more bearing surface for the tail of the upper knife than either of the straight knives, and consequently the number of grinding operations is decreased, and the life of the knives is increased.

Upper Knife The upper knife is carried by an arm fixed to a pivot shaft and this arm is reciprocated by an eccentric on the main shaft. The upper knife is spring pressed against the lower knife, and the pressure may be regulated by a thumb nut on the right hand end of the pivot shaft. A pressure only sufficient to cause the knives to properly cut should be used. Too much pressure will not increase the cutting action, but will increase the number of grinding operations.

The upper knife may be raised and held in an inoperative position by first turning the locking handle to the left. To return knife to operative position, press on the arm which carries the knife, at a point in rear of the presser foot and in a direction towards the pulley, and swing the arm downwardly. Be sure and turn the locking handle to the right.

Clean and Oil Machine AT LEAST ONCE Every Day

From the library of: Diamond Needle Corp

TRIMMING MECHANISM

Setting the Knives The lower knife must generally be set level with the throat plate. The clamping screw must be tightened very securely. The sildable bar which carries the lower knife is supported by a vertically adjustable stud, which extends upwardly from the base. This stud serves to assist the bar in resisting the pressure caused by the upper knife.

Changing the Knives There is no economy in putting in only one re-sharpened knife, as a new cutting edge, co-operating with an old one, will become dull after a comparatively short service. The small amount of grinding required, where they are only slightly dulled, more than compensates for the labor of changing them.

Re-sharpening knives should be put in at regular intervals without regard to the service the old ones have performed. In this way a large quantity of unsatisfactory work, due to the operators' failure to notice that the knives are not cutting properly, will be avoided. The interval will necessarily depend on the class of goods being cut, and on the lateral pressure of the upper knife against the lower one. Some grades of goods require a change of knives twice a week, while other grades may not require a change oftener than once in eight weeks. In many factories, operators are given a supply of re-sharpened knives at regular intervals, and make the change themselves.

From the library of Diamond Needle Corp

KNIFE GRINDERS

There are two styles of grinders, Nos. 15498 D and 15498 AA, as shown in the accompanying illustrations. The former is used for curved upper knives and straight lower knives, while the latter is used for curved upper and lower knives.

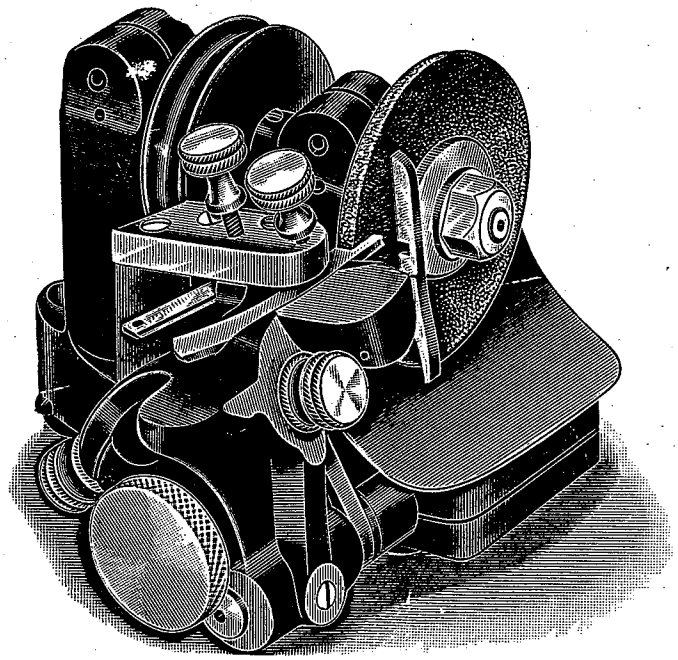

15498 D

Installation The knife grinders are not regularly shipped with machines, but either style can be furnished at the price listed in the "parts" catalogue. It may be set on the sewing machine table and driven by an ordinary power transmitter or it may be driven from an overhead shaft. If a power transmitter is used, it should be fastened to the under side of the table slightly back of the grinder, so that the front part of the belt will not interfere with the grinder frame.

Clean and Oil Machine AT LEAST ONCE Every Day

From the library of: Diamond Needle Corp

KNIFE GRINDERS

Speed The diameter of the grinder pulley is two inches. To make a smooth cutting edge and leave the burrs on the opposite side, the top of the wheel should turn towards the knife. The speed of the emery wheel should be at least 3500 R. P. M., but should not exceed 5000 R. P. M., although it may be safely driven at 8000 R. P. M. A speed less than 3500 R. P. M. would allow the knives to cut the emery wheel, while a speed greater than 5000 R. P. M. will require exceptionally great care to avoid drawing the temper.

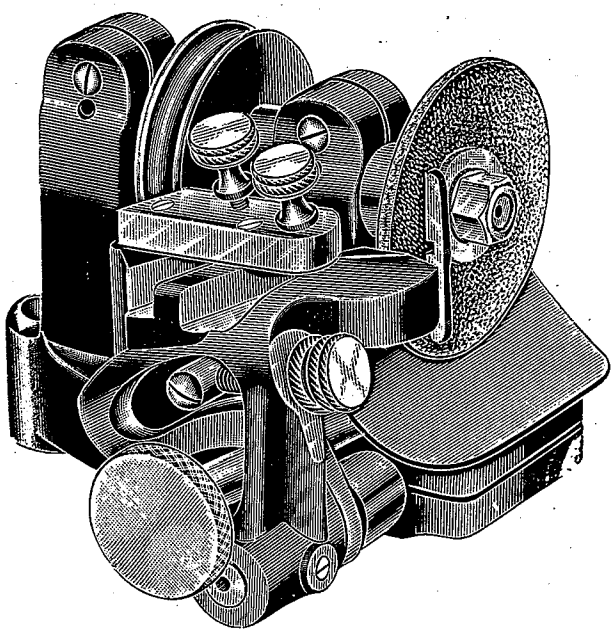

15498 AA

Grinding the Knives A swinging frame, adjustable to and from the wheel by a thumb screw, is provided to position automatically the knives at the correct angle. Light cuts should be taken, otherwise the temper of the knife will be drawn.

It is inadvisable to use this knife grinder for scissors, tools or machine parts, as such work would put it out of shape. A small utility grinder No. 21394 can be furnished at a slight cost for miscellaneous grinding.

If preferred, the knives may be sent to our nearest office, and the grinding will be done promptly for a nominal charge.

Clean and Oil Machine AT LEAST ONCE Every Day

From the library of: Diamond Needle Corp

KNIFE GRINDERS

Lower Knife This is ground by clamping it in the left opening in the swinging frame and swinging the knife across the face of the wheel. To avoid the necessity of moving the swinging frame towards the emery wheel every time a new cut is to be taken, a positioning lever is provided for setting the knife. If after taking a cut to the left and back to the right across the end of a dull knife, it is not found sharp enough, unclamp the knife, push it against the lever, and re-clamp it. This method will permit another cut of the same size to be removed without any danger of grinding away the swinging frame.

For hemming machines, Styles 15400 E and 15400 F, which have the guide for the folded edge fastened below the cloth plate, the lower knife must have the rear corner ground away.

Upper Knife This is ground in practically the same way as the lower knife. To avoid cutting away the guiding toe, a careful adjustment of the right-hand stop regulating screw is necessary. To secure a square corner between the cutting edge and guiding toe, the right-hand edge of the wheel should be kept square. If the wheel becomes rounded, an emery wheel dresser or a coarse file should be applied. The latter can be used only by turning the wheel by hand. The guiding toe should not extend more than 3/8 inch nor less than $\frac{5}{16}$ inch below the cutting edge.

When the left side of the toe becomes worn so that its thickness is noticeably reduced, it will be preferable to grind off the toe and make an entirely new cutting edge.

From the library of: Diamond Needle Corp.

THREAD STANDS

Either of the two styles illustrated is furnished with these machines. A 2-spool stand is furnished with each machine using two threads, and a 3-spool stand with each machine using three threads.

The stand should be screwed to the table at a point in rear of the sewing machine and at a short distance to the right.

The spool support of Style D is vertically adjustable, whereas the spool support of Style C is non-adjustable. It is important to have each thread guide disposed directly above the center of the corresponding spool in order for the thread to unwind with a minimum amount of friction.

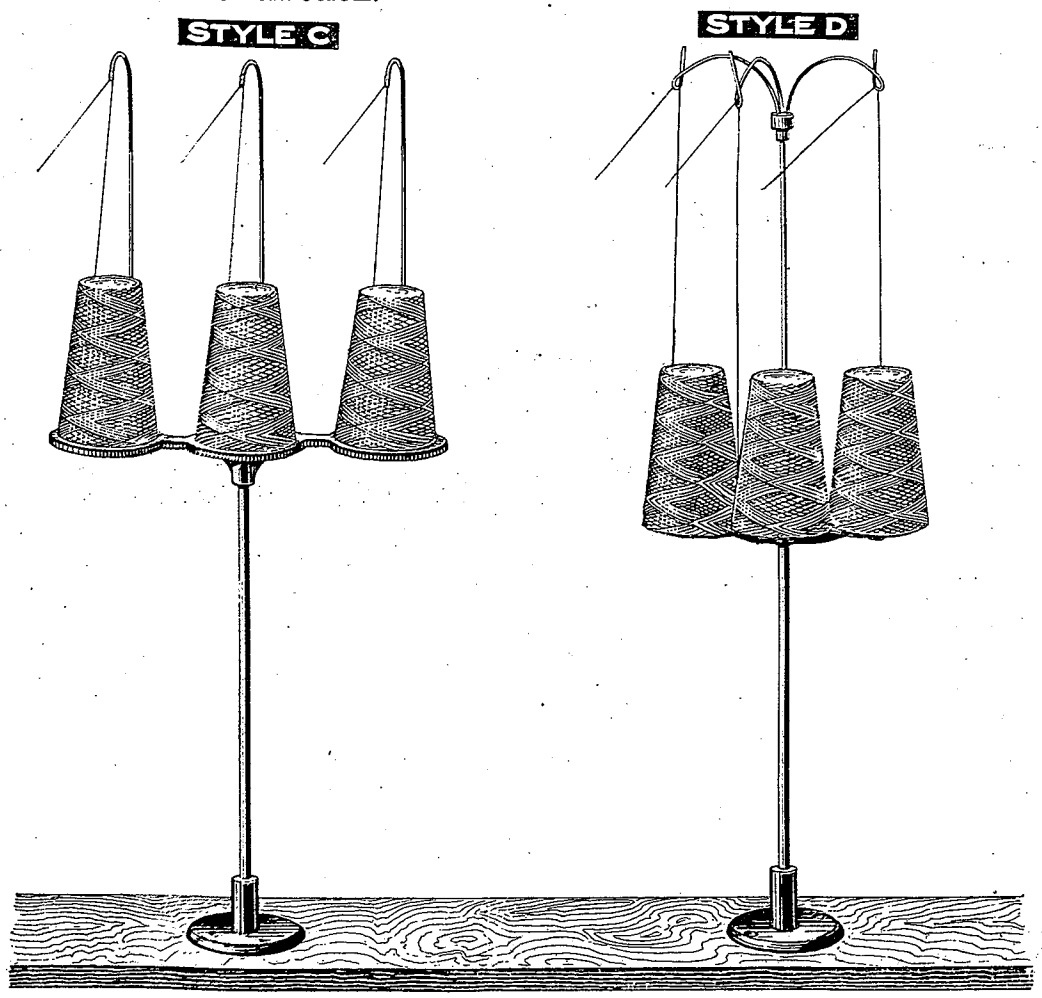

TAPE SPOOL SUPPORT AND GUIDE

A tape spool support and a tape guide are furnished with a few styles of machines. The spool support should be set on the table in rear of the machine and slightly to the right of the line of feed, or suspended from the ceiling. The tape guide should be fastened on the front of the sewing machine frame and to the right of the needle bar. A light tension, sufficient only to steady the tape is all that is required.

Clean and Oil Machine AT LEAST ONCE Every Day

From the library of: Diamond Needle Corp.

NEEDLES

Success in the operation of these machines can be assured only by the use of genuine Union Special Needles, furnished by the Union Special Machine Company. Obviously, it is to our interest to maintain the reputation of the machines by furnishing the very best needles obtainable.

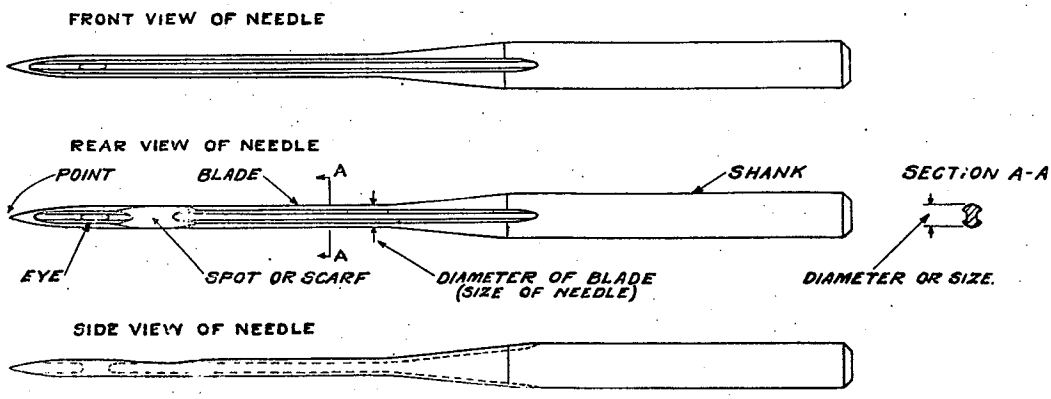

VIEWS OF NEEDLE—Type 150

To reduce friction and consequent heating, the needles are nickel plated. The size is determined by the thread and fabric. The needle eye should be of a size which will permit the desired thread to slide freely through it. Fabric made of fine yarns will not permit the use of as large a needle as will fabric made of coarse yarns, because the large needle, in penetrating, will cut the fine yarn and make too large a hole in the fabric. In the following detailed descriptions of the machines, the needles GENERALLY used for the respective machines are indicated.

Ordering To have orders promptly and accurately filled, a full description, or either a sample needle or the empty package should accompany the order.

As a means to simplify the ordering of, and also to avoid errors in the description of the needles desired, the following classification for needles used in machines of Classes 15400, 15500 and 15600 has been adopted.

Clean and Oil Machine AT LEAST ONCE Every Day

From the library of: Diamond Needle Corp

NEEDLES

CLASSIFICATION

Type No.	New Size No.	Old Size No.	DESCRIPTION
150	025	0000	Class "R", double groove, spotted, nickel plated.
150	027	000	Class "R", double groove, spotted, nickel plated.
150	032	00	Class "R", double groove, spotted, nickel plated.
150	036	0	Class "R", double groove, spotted, nickel plated.
150	040	1	Class "R", double groove, spotted, nickel plated.
150	044	2	Class "R", double groove, spotted, nickel plated.
150	049	3	Class "R", double groove, spotted, nickel plated.
150	054	4	Class "R", double groove, spotted, nickel plated.
150	060	5	Class "R", double groove, spotted, nickel plated.
151	032	00	Class "R", double groove, spotted, nickel plated, ball eye
151	036	0	Class "R", double groove, spotted, nickel plated, ball eye
151	040	1	Class "R", double groove, spotted, nickel plated, ball eye

The "Type" number represents the full description of the needle with the exception of the diameter of the blade which governs the size of the needle.

The "Size" number represents the actual diameter of the blade in thousandths of an inch.

Example: Heretofore an order would have read "100 needles, size No. 1, Class R, double groove, spotted, nickel plated."

Under this new classification such an order will read "100 needles, Type 150, size 040."

From the library of: Diamond Needle Corp

SPEEDS OF MACHINES

The handling of various operations, the differences in materials, the ability of each operator, and the speed limit of the machines, must all be considered in determining the desired speed of each machine. It is therefore impracticable to state definitely what the maximum speed of each style of machine should be. However, as a guide only, the average speed for each style is indicated in the description associated with the respective styles. This speed is, of course, capable of being varied either up or down, depending on the local conditions.

The sizes of machine, transmitter and line shaft pulleys are described under "Installation," page 15.

THREADS

The threads, both in size and quality may be varied in each style of machine, but in the following detailed descriptions of the machines, the threads GENERALLY used in the respective machines are indicated.

NEEDLE THREAD TENSIONS

Some styles of machines carry two tensions for the needle thread, the tension on the left having a stronger spring than the tension on the right. DO NOT REVERSE THESE SPRINGS. By this arrangement, the proper strain can be placed on the thread to properly set each stitch, and without interfering with any drag which may occur at the spool.

THREADING OF MACHINES

Inasmuch as the controlling devices for the different threads vary in many of the styles of machines, the following illustrations will be of assistance in threading the machines.

From the library of: Diamond Needle Corp

15400 A

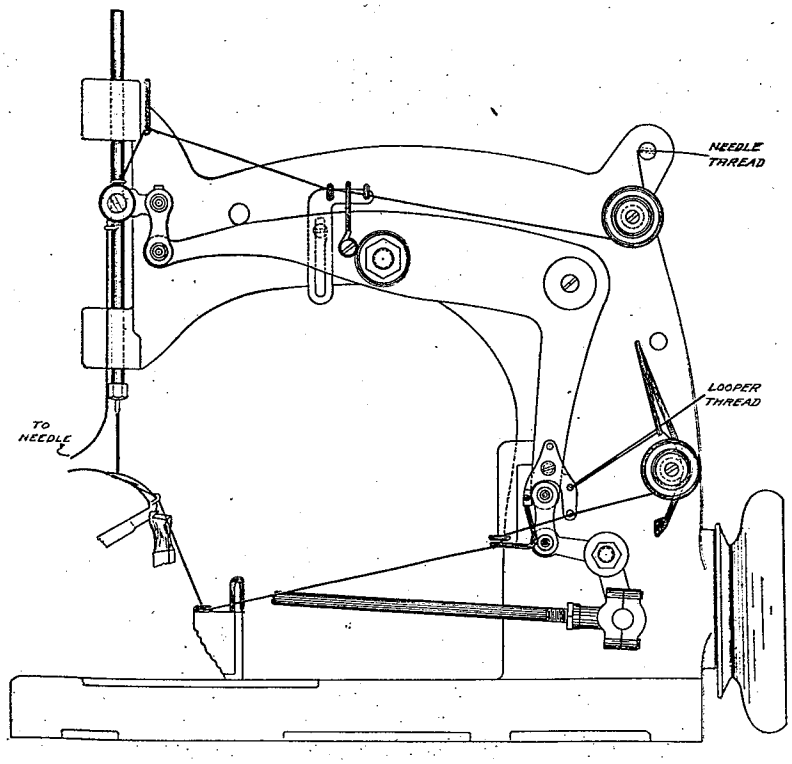

This machine is extensively used for seaming all grades of knitted underwear. It makes the 2-thread stitch, using the short spreader and long looper, and therefore belongs in Group 3. See page 11.

Needles generally used: Type 150, sizes 036 and 040. See page 40.

Needle thread generally used: No. 50, 3-cord, soft finish cotton.

Looper thread generally used: No. 16, single ply, cotton yarn.

The manner of leading both threads through the tensions, thread guides, etc., is shown in the above illustration.

This machine is fitted with the tandem differential feed. See page 30.

For adjusting the needle, spreader and looper, see page 24.

For oiling machine, see page 19.

The average speed of this machine, when used for the operation above noted, is 3400 R. P. M. See page 42.

The short spreader gauge should be $\frac{7}{32}$ inch. See page 25.

Clean and Oil Machine AT LEAST ONCE Every Day

From the library of Diamond Needle Corp

15400 C

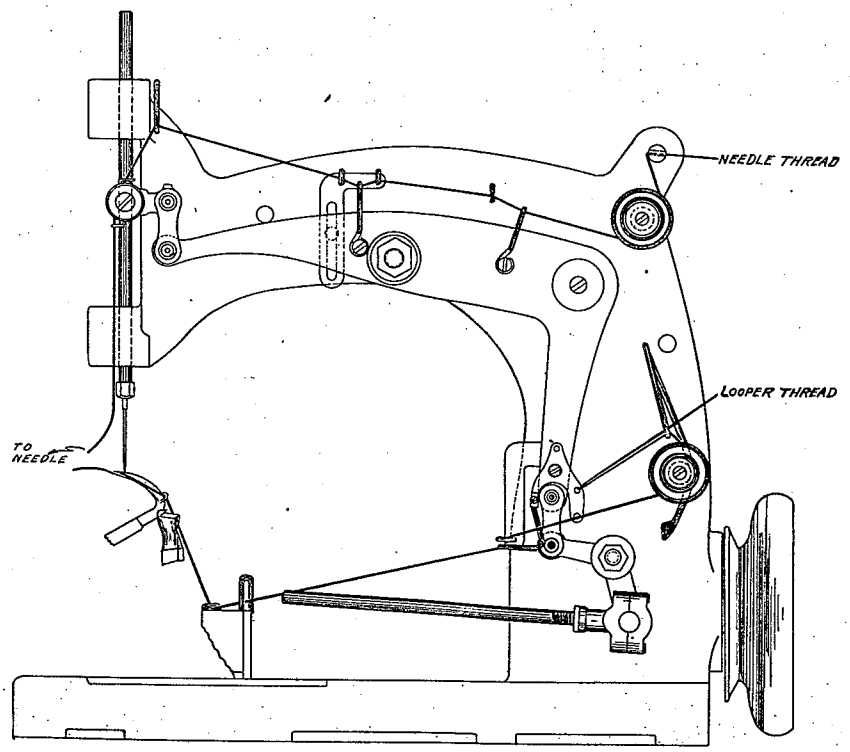

This machine is extensively used for finishing the trimmed edges of both knitted and woven fabrics. It makes the 2-thread stitch, using the short spreader and the long looper, and therefore belongs in Group 3. See page 11.

Needles generally used: Type 150, sizes 036 and 040. See page 40.

Needle thread and looper thread generally used: No. 30, 2-cord mercerized cotton.

The manner of leading both threads through the tensions, thread guides, etc., is shown in the above illustration.

This machine is fitted with the tandem differential feed. See page 30.

For adjusting the needle, spreader and looper, see page 24.

For oiling machine, see page 19.

The average speed of this machine, when used for the operation above noted, is 3400 R. P. M. See page 42.

The short spreader gauge should be $\frac{7}{32}$ inch. See page 25.

Clean and Oil Machine AT LEAST ONCE Every Day

From the library of: Diamond Needle Corp

15400 D

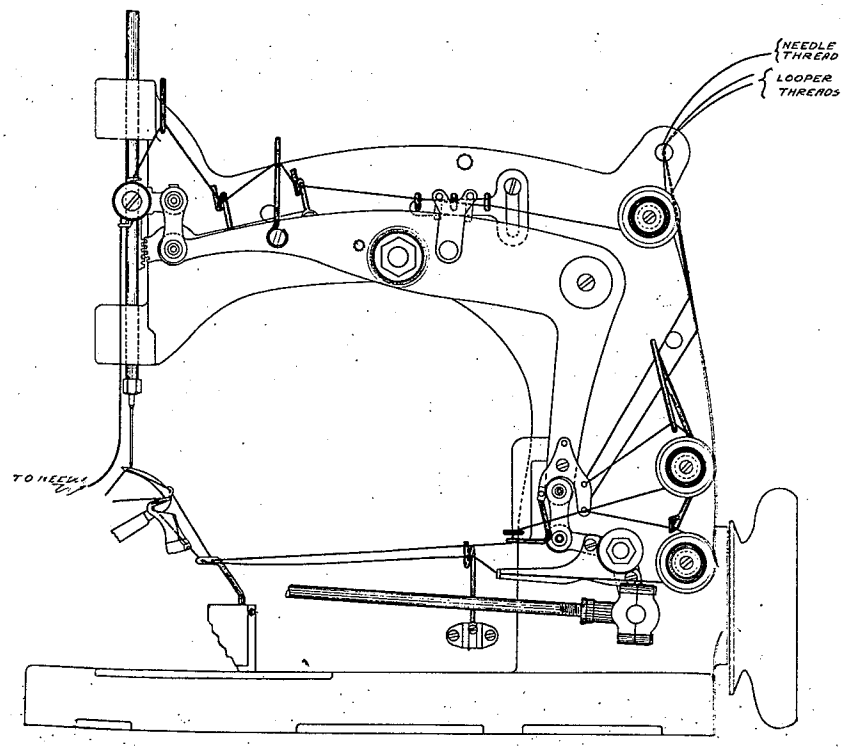

This machine is extensively used for finishing the trimmed edges of both knitted and woven fabrics. It makes the 3-thread elastic or "Square-edge" stitch, using the short looper and the long looper, and therefore belongs in Group 1. See page 8.

Needles generally used: Types 150, sizes 036 and 040. See page 40.

Needle thread, short looper thread and long looper thread generally used: No. 30, 2-cord, mercerized cotton.

The manner of leading all three threads through the tensions, thread guides, etc., is shown in the above illustration.

This machine is fitted with the tandem differential feed. See page 30.

For adjusting the needle and both loopers, see page 24.

For oiling machine, see page 19.

The average speed of this machine, when used for the operation above noted, is 3400 R. P. M. See page 42.

The short looper gauge should be $\frac{3}{16}$ inch. See page 25.

Clean and Oil Machine AT LEAST ONCE Every Day

From the library of Diamond Needle Corp

15400 E

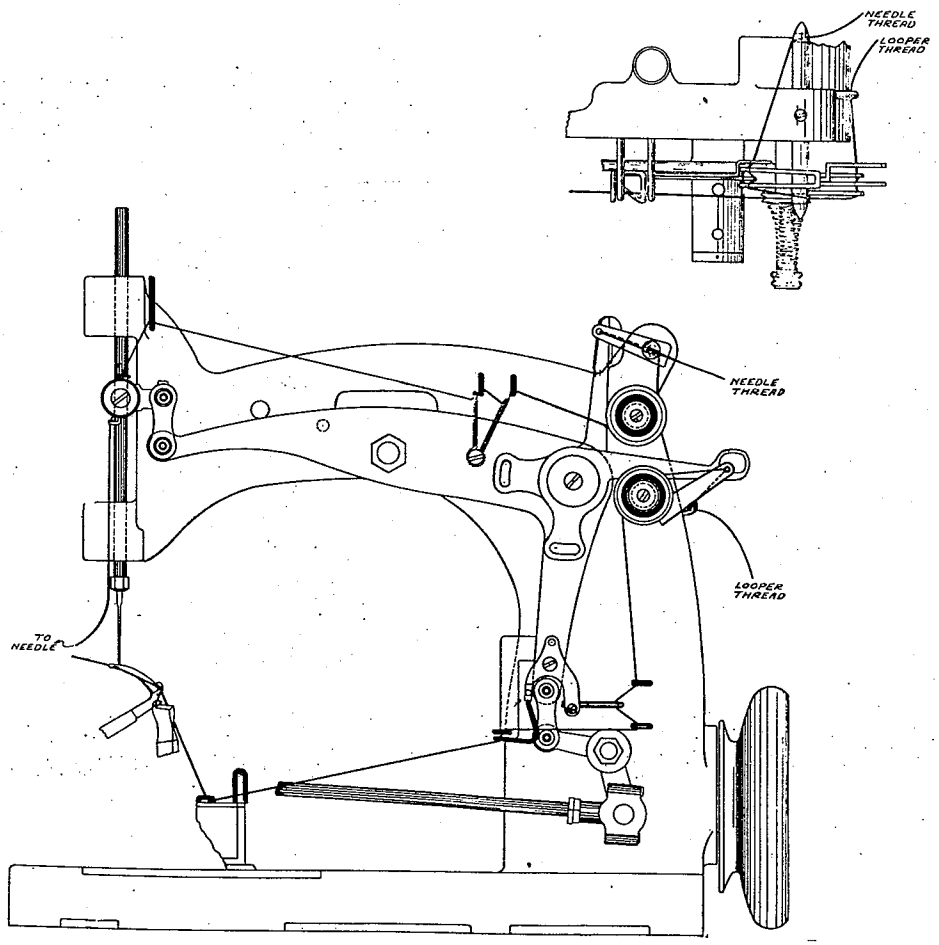

This machine is extensively used for making "concealed stitch" hems on the bottoms of knitted undershirts and similar garments. It makes the 2-thread stitch, using the short spreader and the long looper, and therefore belongs in Group 3. See page 11.

Needles generally used: Type 150, sizes 032, 036 and 040. See page 40.

Needle thread and looper thread generally used: No. 60, 3-cord, soft finish cotton.

The manner of leading both threads through the tensions, thread guides, etc., is shown in the above illustration.

This machine is fitted with tiltable feed. See page 28.

For adjusting the needle, spreader and looper, see page 24.

For oiling machine, see page 19.

The average speed of this machine, when used for the operation above noted, is 3400 R. P. M. See page 42.

The short spreader guage should be $\frac{7}{32}$ inch. See page 25.

Clean and Oil Machine AT LEAST ONCE Every Day

From the library of: Diamond Needle Corp

15400 F

This machine is extensively used for making the "concealed stitch" hem on stockings and on other small tubular work. It makes the 2-thread stitch using the short spreader and the long looper, and therefore belongs in Group 3. See Page 11.

This machine is equipped with a continuously operated thread cutter, for cutting the chain of stitches between the stockings, and also with an edge guide which is attached to the lower knife support.

Needles generally used: Type 150, sizes 032, 036 and 040. See page 40.

Needle thread generally used: No. 70, 3-cord, soft finish cotton.

Looper thread generally used: No. 20, single ply, cotton yarn.

The manner of leading both threads through the tensions, thread guides, etc., is the same as in the 15400 E, which is illustrated on the preceding page.

This machine is fitted with the tiltable feed. See page 28.

For adjusting needle, spreader and looper, see page 24.

For oiling machine, see page 19.

The average speed of this machine, when used for the operation above noted, is 3400 R. P. M. See page 42.

The short spreader gauge should be $\frac{7}{32}$ inch. See page 25.

From the library of: Diamond Needle Corp

15400 G

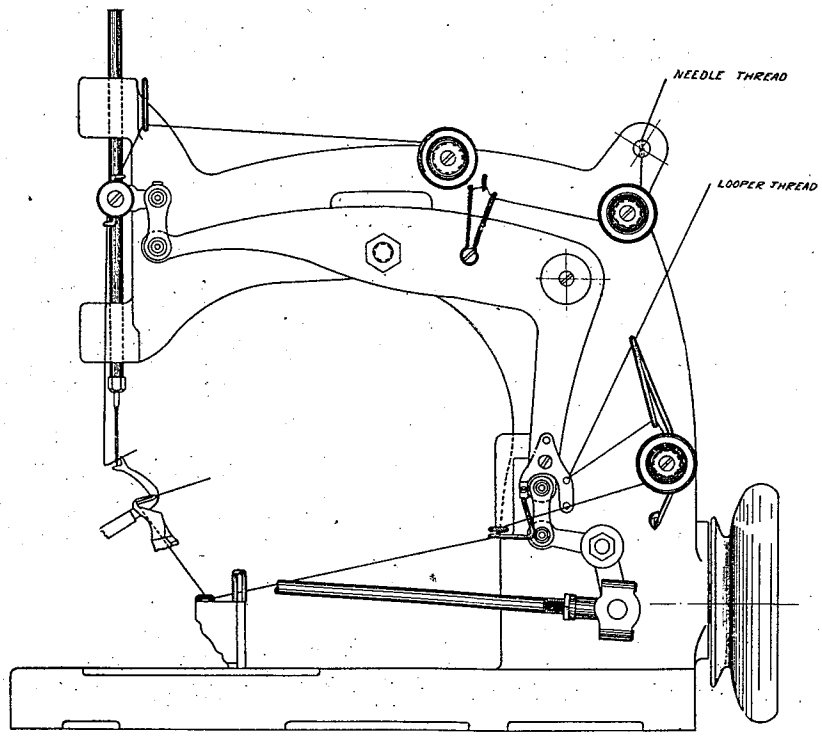

This machine is extensively used for seaming sweaters and other heavy weight knitted materials. It makes the 2-thread stitch, using the short looper and the long spreader, and therefore belongs in Group 2. See page 10.

Needle generally used: Type 150, size 054. See page 40.

Needle thread and looper thread generally used: No. 16, 2-ply, wool yarn.

The manner of leading both threads through the tensions, thread guides, etc., is shown in the above illustration.

This machine is fitted with the tandem differential feed. See page 30.

For adjusting the needle, looper and spreader, see page 24.

For oiling machine, see page 19.

The average speed of this machine, when used for the operation above noted, is 3200 R. P. M. See page 42.

The short looper gauge should be $\frac{7}{32}$ inch. See page 25.

Clean and Oil Machine AT LEAST ONCE Every Day

From the library of: Diamond Needle Corp

15400 H

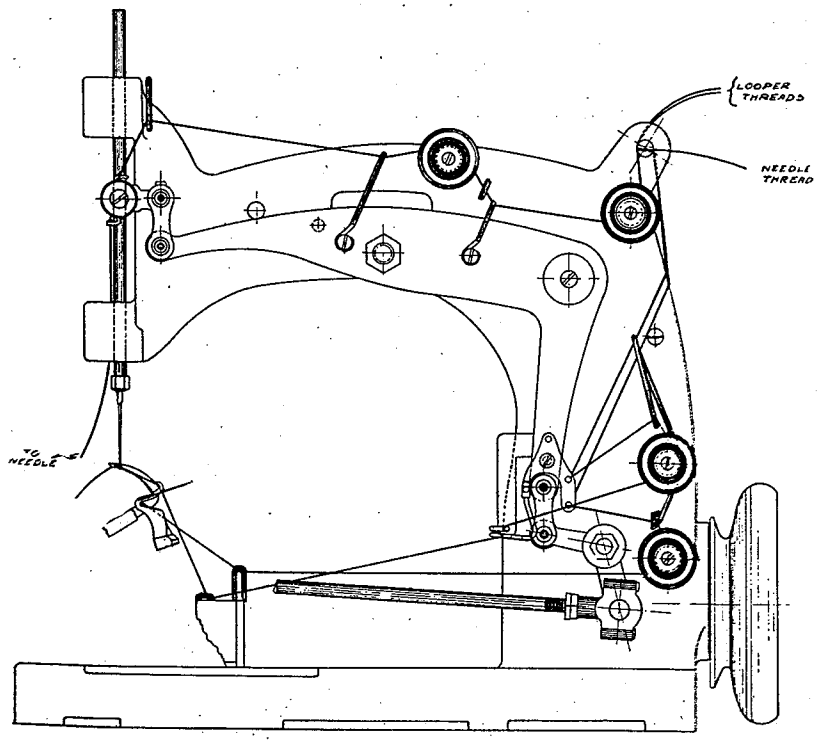

This machine is extensively used for sewing sleeves in waists and similar garments. It makes the 3-thread flat or "Union Overseaming Stitch", using the short looper and the long looper, and therefore belongs in Group 1. See page 8.

A re-enforcing tape is secured along the upper face of the fabric by the needle thread, and is covered by the long looper thread. See page 13.

Needle generally used: Type 150, size 040. See page 40.

Needle thread generally used: No. 60, hard finish cotton.

Looper threads generally used: No. 30, 2-ply, cotton yarn.

The manner of leading all three threads through the tensions, thread guides, etc., is shown in the above illustration.

This machine is fitted with the tiltable feed. See page 28.

For adjusting the needle and both loopers, see page 24.

For oiling machine, see page 19.

The average speed of this machine, when used for the operation above noted, is 3200 R. P. M. See page 42.

The short looper gauge should be $\frac{3}{16}$ inch. See page 25.

Clean and Oil Machine AT LEAST ONCE Every Day

From the library of: Diamond Needle Corp

15400 J

This machine is extensively used for seaming outside skirts. It makes the 3-thread flat, or "Union Overseaming Stitch," using the short looper and the long looper, and therefore belongs in Group 1. See page 8.

Needle generally used: Type 150, size 040. See page 40.

Needle thread generally used: No. 60, hard finish cotton.

Looper threads generally used: No. 30, 2-ply, cotton yarn.

The manner of leading all three threads through the tensions, thread guides, etc., is the same as in the 15400 H, which is illustrated on the preceding page.

This machine is fitted with the tiltable feed. See page 28.

For adjusting the needle and both loopers, see page 24.

For oiling machine, see page 19.

The average speed of this machine, when used for the operation above noted, is 3400 R. P. M. See page 42.

The short looper gauge should be $\frac{3}{16}$ inch. See page 25.

From the library of: Diamond Needle Corp

15400 L

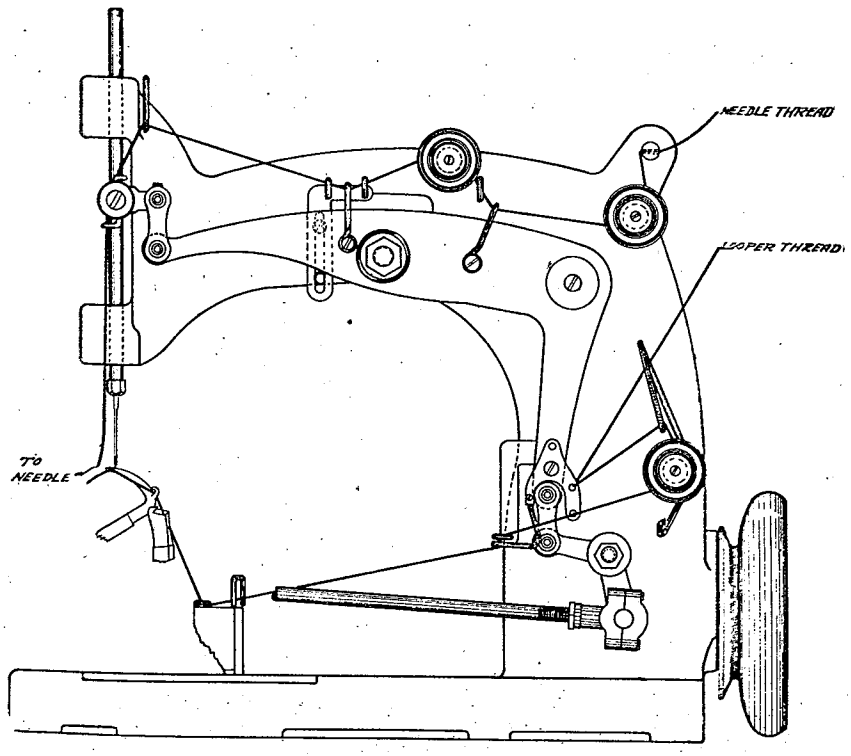

This machine is extensively used for finishing the trimmed edges of knitted and woven fabrics and for seaming small tubular work. It makes the 2-thread stitch, using the short spreader and the long looper, and therefore belongs in Group 3. See page 11.

Needles generally used: Type 150, sizes 036 and 040. See page 40.

Needle thread and looper thread generally used: No. 30, 2-cord, mercerized cotton.

The manner of leading both threads through the tensions, thread guides, etc., is shown in the above illustration.

This machine is fitted with the tiltable feed. See page 28.

For adjusting the needle, spreader and looper, see page 24.

For oiling machine, see page 19.

The average speed of this machine, when used for the operation above noted, is 3400 R. P. M. See page 42.

The short spreader gauge should be $\frac{7}{32}$ inch. See page 25.

Clean and Oil Machine AT LEAST ONCE Every Day

From the library of: Diamond Needle Corp

15400 M

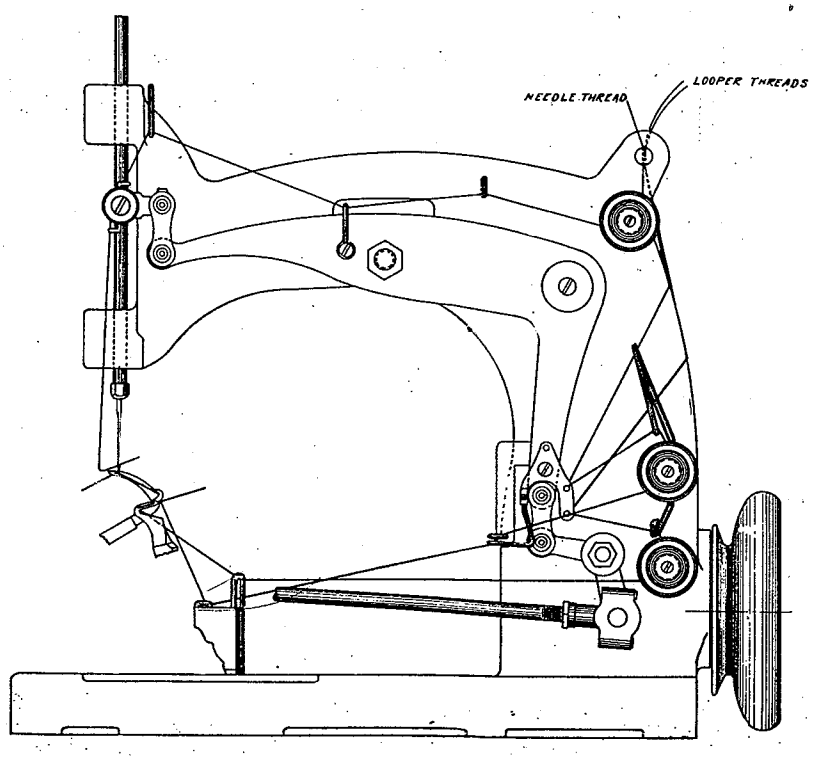

This machine is extensively used for seaming knit underwear and similar garments. It makes the 3-thread elastic, or "Square-edge" stitch, using the short looper and the long looper, and therefore belongs in Group 1. See page 8.

Needles generally used: Type 150, sizes 032, 036 and 040. See page 40.

Needle thread and looper threads generally used: No. 60, 3-cord, soft finish cotton.

The manner of leading all three threads through the tensions, thread guides, etc., is shown in the above illustration.

This machine is fitted with the tandem differential feed. See page 30.

For adjusting the needle and both loopers, see page 24.

For oiling machine, see page 19.

The average speed of this machine, when used for the operation above noted, is 3400 R. P. M. See page 42.

The short looper gauge should be $\frac{7}{32}$ inch. See page 25.

Clean and Oil Machine AT LEAST ONCE Every Day

From the library of: Diamond Needle Corp

15400 N

This machine is extensively used for finishing the trimmed edges of knitted and woven fabrics and for seaming small tubular work. It makes the 3-thread elastic, or "Square-edge" stitch, using the short looper and the long looper, and therefore belongs in Group 1. See page 8.

Needles generally used: Type 150, sizes 036 and 040. See page 40.

Needle thread and looper threads generally used: No. 30, 2-cord, mercerized cotton.

The manner of leading all three threads through the tensions, thread guides, etc., is the same as in the 15400 M, which is illustrated on the preceding page.

This machine is fitted with the tiltable feed. See page 28.

For adjusting the needle and both loopers, see page 24.

For oiling machine, see page 19.

The average speed of this machine, when used for the operation above noted, is 3400 R. P. M. See page 42.

The short looper gauge should be $\frac{7}{32}$ inch. See page 25.

From the library of Diamond Needle Corp

15400 P

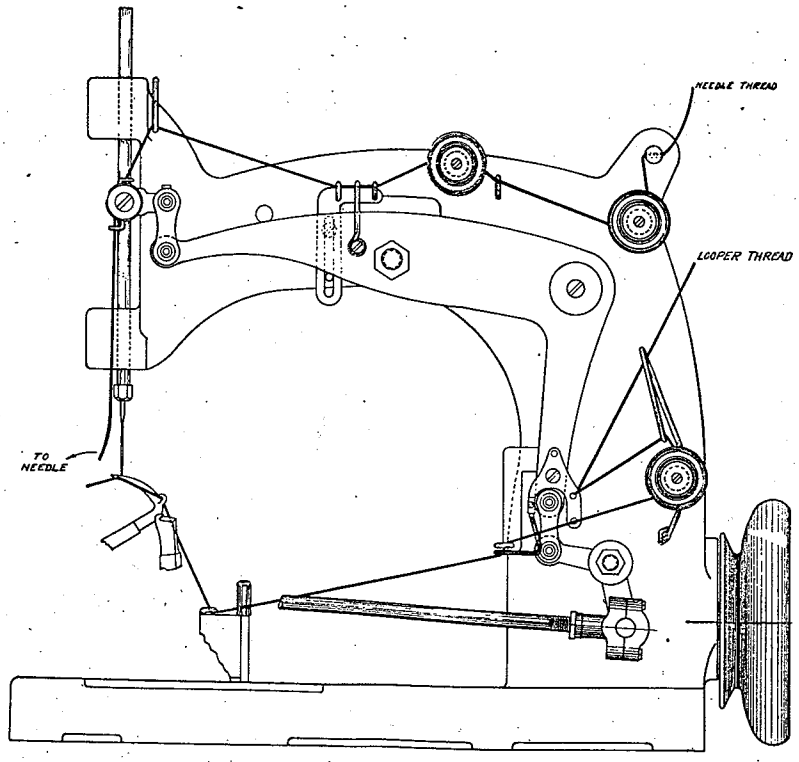

This machine is extensively used for making the "concealed stitch" hem on stockings and on other small tubular work. It makes the 2-thread stitch, using the short spreader and the long looper, and therefore belongs in Group 3. See page 11.

This machine is equipped with a continuously operated thread cutter, for cutting the chain of stitches between the stockings, and also with an edge guide which is attached to the presser foot.

Needles generally used: Type 150, sizes 032, 036 and 040. See page 40.

Needle thread generally used: No. 70, 3-cord, soft finish cotton.

Looper thread generally used: No. 20, single ply, cotton yarn.

The manner of leading both threads through the tensions, thread guides, etc., is shown in the above illustration.

This machine is fitted with the tandem differential feed. See page 30.

For adjusting the needle, spreader and looper, see page 24.

For oiling machine, see page 19.

The average speed of this machine, when used for the operation above noted, is 3400 R. P. M. See page 42.

The short spreader gauge should be $\frac{7}{32}$ inch. See page 25.

Clean and Oil Machine AT LEAST ONCE Every Day

From the library of: Diamond Needle Corp

15400 Q

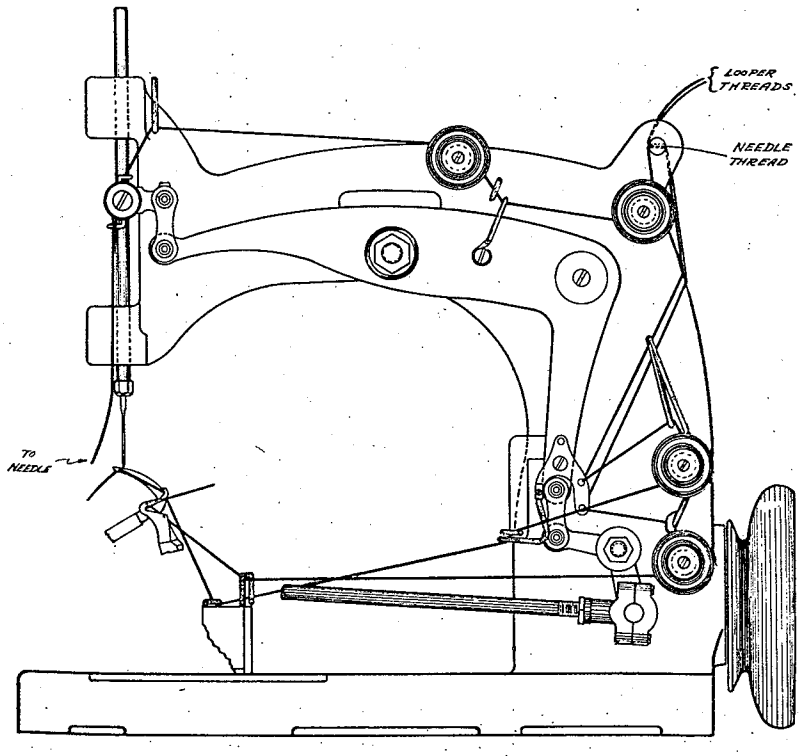

This machine is extensively used for seaming pockets. It makes the 3-thread flat, or "Union Overseaming Stitch," using the short looper and the long looper, and therefore belongs in Group 1. See page 8.

Needles generally used: Type 151, size 040, or Type 150, size 044. See page 40.

Needle thread generally used: No. 36, 3-cord, glaze finish cotton.

Looper threads generally used: No. 40, 3-cord, soft finish cotton.

The manner of leading all three threads through the tensions, thread guides, etc., is shown in the above illustration.

This machine is fitted with the tiltable feed. See page 28.

For adjusting the needle and both loopers, see page 24.

For oiling machine, see page 19.

The average speed of this machine, when used for the operation above noted, is 3000 R. P. M. See page 42.

The short looper gauge should be $\frac{3}{16}$ inch. See page 25.

Clean and Oil Machine AT LEAST ONCE Every Day

From the library of: Diamond Needle Corp

15400 R

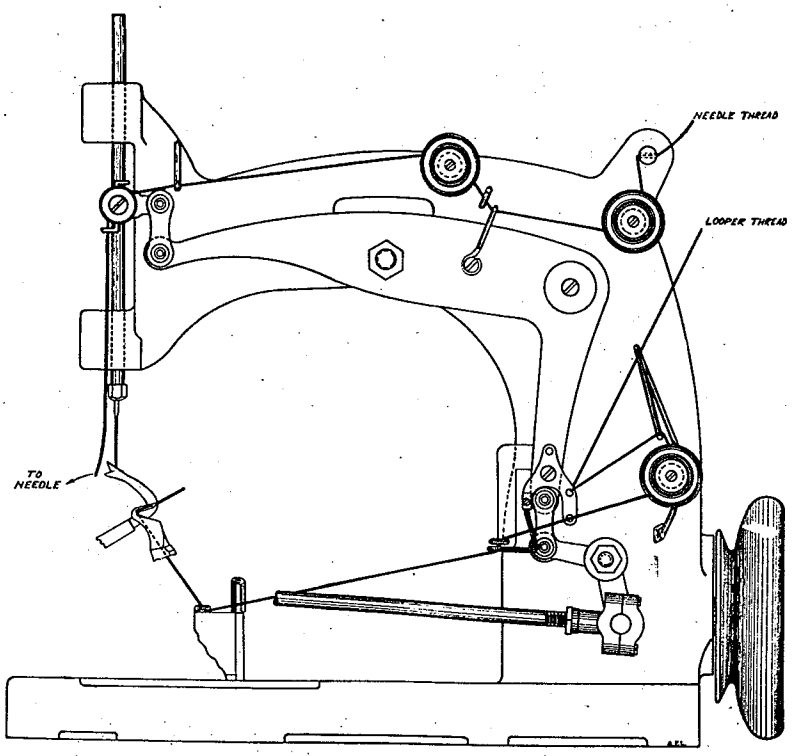

This machine is extensively used for seaming knit underwear and similar garments. It makes the 2-thread stitch, using the short looper and the long spreader, and therefore belongs in Group 2. See page 10.

Needles generally used: Type 150, sizes 036 and 040. See page 40.

Needle thread generally used: No. 50, 3-cord, soft finish cotton.

Looper thread generally used: No. 16, single ply, cotton yarn.

The manner of leading both threads through the tensions, thread guides, etc., is shown in the above illustration.

This machine is fitted with the tandem differential feed. See page 30.

For adjusting the needle, looper and spreader, see page 24.

For oiling machine, see page 19.

The average speed of this machine, when used for the operation above noted, is 3400 R. P. M. See page 42.

The short looper gauge should be $\frac{7}{32}$ inch. See page 25.

Clean and Oil Machine AT LEAST ONCE Every Day

From the library of: Diamond Needle Corp

15400 S

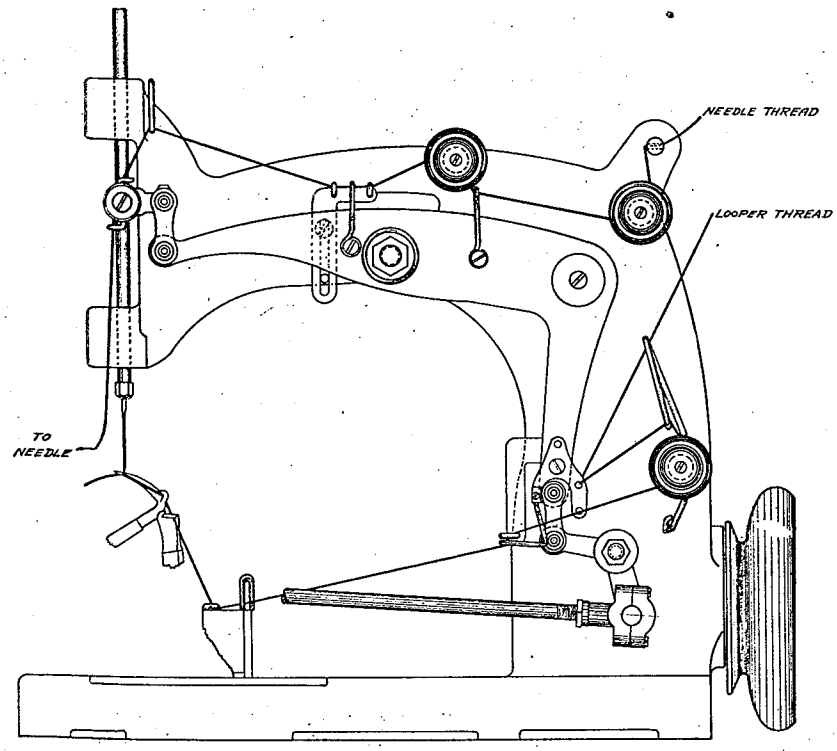

This machine is extensively used for serging trousers and similar garments. It makes the 2-thread stitch, using the short spreader and the long looper, and therefore belongs in Group 3. See page 11.

Needle generally used: Type 150, size 040. See page 40.

Needle thread and looper thread generally used: No. 70, 3-cord, soft finish cotton.

The manner of leading both threads through the tensions, thread guides, etc., is shown in the above illustration.

This machine is fitted with the plain feed. See page 28.

For adjusting the needle, spreader and looper, see page 24.

For oiling machine, see page 19.

The average speed of this machine, when used for the operation above noted, is 3000 R. P. M. See page 42.

The short spreader gauge should be $\frac{7}{32}$ inch. See page 25.

Clean and Oil Machine AT LEAST ONCE Every Day

From the library of Diamond Needle Corp

15400 T

This machine is extensively used for seaming knit underwear and similar garments. It makes the 2-thread stitch, $\frac{1}{16}$ inch wide, using the short spreader and the long looper, and therefore belongs in Group 3. See page 11.

Needles generally used: Type 150, sizes 025, 027 and 032. See page 40.

Needle thread generally used: No. 70, 3-cord, soft finish cotton.

Looper thread generally used: No. 40, 3-cord, soft finish cotton.

The manner of leading both threads through the tensions, thread guides, etc., is the same as in the 15400 P, which is illustrated on page 54.

This machine is fitted with the tandem differential feed. See page 30.

For adjusting the needle, spreader and looper, see page 24.

For oiling machine, see page 19.

The average speed of this machine, when used for the operation above noted, is 3400 R. P. M. See page 42.

The short spreader gauge should be $\frac{7}{32}$ inch. See page 25.

15400 U

This machine is extensively used for making the "concealed stitch" hem on sweaters and other heavy-weight knitted materials. It makes the 2-thread stitch, using the short spreader and the long looper, and therefore belongs in Group 3. See page 11.

Needle generally used: Type 150, size 044. See page 40.

Needle thread generally used: No. 40, 3-cord, soft finish cotton.

Looper thread generally used: No. 16, 2-ply, wool yarn.

The manner of leading both threads through the tensions, thread guides, etc., is the same as in the 15400 A, which is illustrated on page 43.

This machine is fitted with the tandem differential feed. See page 30.

For adjusting the needle, spreader and looper, see page 24.

For oiling machine, see page 19.

The average speed of this machine, when used for the operation above noted, is 3400 R. P. M. See page 42.

The short spreader gauge should be $\frac{7}{32}$ inch. See page 25.

From the library of: Diamond Needle Corp

15400 W

This machine is extensively used for seaming sweaters and other heavy-weight knitted materials. It makes the 2-thread stitch, using the short spreader and the long looper, and therefore belongs in Group 3. See page 11.

Needle generally used: Type 150, size 044. See page 40.

Needle thread generally used: No. 40, 3-cord, soft finish cotton.

Looper thread generally used: No. 16, 2-ply, wool yarn.

The manner of leading both threads through the tensions, thread guides, etc., is the same as in the 15400 A, which is illustrated on page 43.

This machine is fitted with the tandem differential feed. See page 30.

For adjusting the needle, looper and spreader, see page 24.

For oiling machine, see page 19.

The average speed of this machine, when used for the operation above noted, is 3400 R. P. M. See page 42.

The short spreader gauge should be $\frac{7}{32}$ inch. See page 25.

15400 X

This machine is extensively used for sewing sleeves in waists and similar garments. It makes the 3-thread flat, or "Union Overseaming Stitch," using the short looper and the long looper, and therefore belongs in Group 1. See page 8.

A re-enforcing tape is secured along the upper face of the fabric by the needle thread, and is covered by the long looper thread. See page 14. This tape may be omitted if desired.

This machine makes a felled seam, the trimmed edges being turned upwardly. See page 13.

This machine is equipped with an intermittent ruffling mechanism, whereby the top fabric only is ruffled. This mechanism may be thrown into or out of operation by the operator's foot.

Needle generally used: Type 150, size 036. See page 40.

Needle thread and looper threads generally used: No. 50, 3-cord, soft finish cotton.

The manner of leading all three threads through the tensions, thread guides, etc., is the same as in the 15400 H, which is illustrated on page 49.

This machine is fitted with the tiltable feed. See page 28.

For adjusting the needle and both loopers, see page 24.

For oiling machine, see page 19.

The average speed of this machine, when used for the operation above noted, is 3000 R. P. M. See page 42.

The short looper gauge should be $\frac{3}{16}$ inch. See page 25.

Clean and Oil Machine AT LEAST ONCE Every Day

From the library of: Diamond Needle Corp

15400 A A

This machine is extensively used for seaming knit underwear and similar garments. It makes the 3-thread flat, or "Union Overseaming Stitch," using the short looper and the long looper, and therefore belongs in Group 1. See page 8.

Needles generally used: Type 150, sizes 032, 036 and 040. See page 40.

Needle thread generally used: No. 50, 3-cord, soft finish cotton.

Looper threads generally used: No. 16, single ply, cotton yarn.

The manner of leading all three threads through the tensions, thread guides, etc., is the same as in the 15400 H, which is illustrated on page 49.

This machine is fitted with the tandem differential feed. See page 30.

For adjusting the needle and both loopers, see page 24.

For oiling machine, see page 19.

The average speed of this machine, when used for the operation above noted, is 3400 R. P. M. See page 42.

The short looper gauge should be $\frac{3}{16}$ inch. See page 25.

From the library of: Diamond Needle Corp

15400 A B

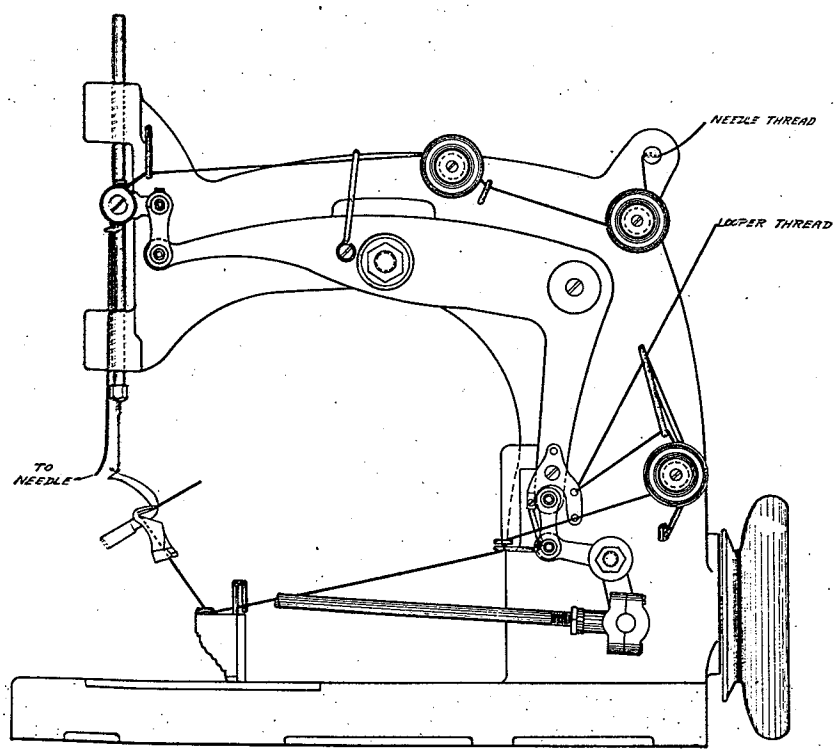

This machine is extensively used for seaming heavy sweaters. It makes the 2-thread stitch, using the short looper and the long spreader, and therefore belongs in Group 2. See page 10.

Needle generally used: Type 150, size 054. See page 40.

Needle thread and looper thread generally used: No. 16, 2-ply, wool yarn.

The manner of leading both threads through the tensions, thread guides, etc., is shown in the above illustration.

This machine is fitted with the tandem differential feed. See page 30.

For adjusting the needle, spreader and looper, see page 24.

For oiling machine, see page 19.

The average speed of this machine, when used for the operation above noted, is 3400 R. P. M. See page 42.

The short looper gauge should be $\frac{3}{16}$ inch. See page 25.

Clean and Oil Machine AT LEAST ONCE Every Day

From the library of Diamond Needle Corp

15400 A C

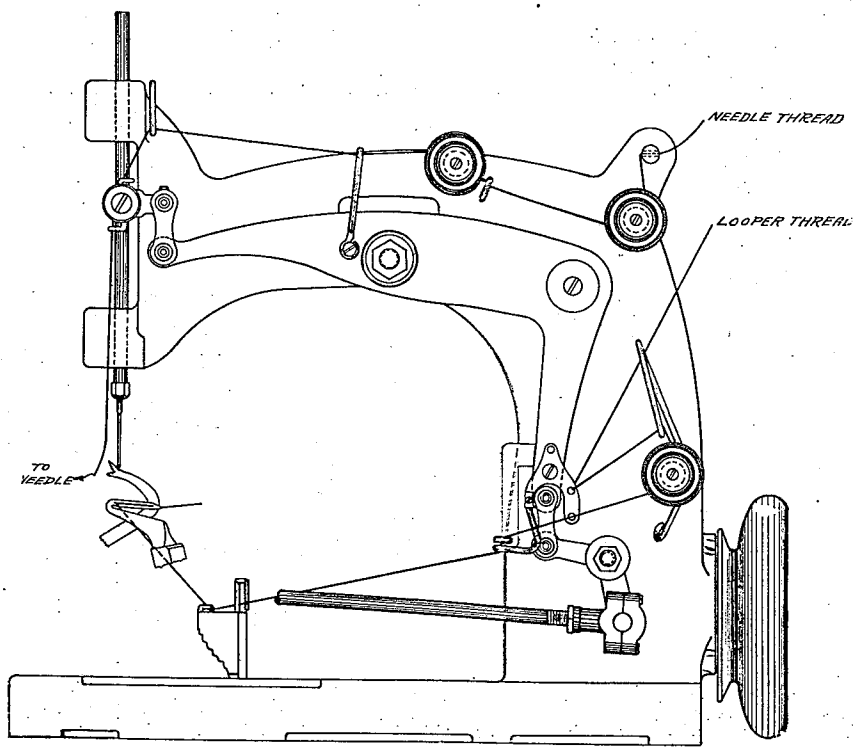

This machine is extensively used for hemming heavy sweaters. It makes the 2-thread stitch, using the short looper and the long spreader, and therefore belongs in Group 2. See page 10.

Needle generally used: Type 150, size 044. See page 40.

Needle thread generally used: No. 40, 3-cord, soft finish cotton.

Looper thread generally used: No. 16, 2-ply, wool yarn.

The manner of leading both threads through the tensions, thread guides, etc., is shown in the above illustration.

This machine is fitted with the tandem differential feed. See page 30.

For adjusting the needle, spreader and looper, see page 24.

For oiling machine, see page 19.

The average speed of this machine, when used for the operation above noted, is 3400 R. P. M. See page 42.

The short looper gauge should be $\frac{3}{16}$ inch. See page 25.

Clean and Oil Machine AT LEAST ONCE Every Day

From the library of: Diamond Needle Corp

15400 A B

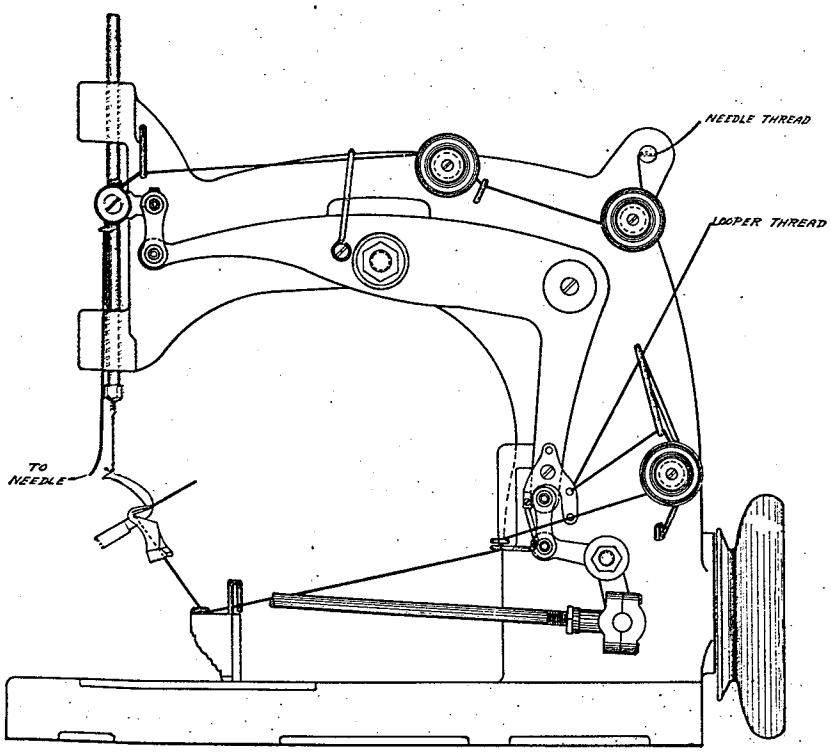

This machine is extensively used for seaming heavy sweaters. It makes the 2-thread stitch, using the short looper and the long spreader, and therefore belongs in Group 2. See page 10.

Needle generally used: Type 150, size 054. See page 40.

Needle thread and looper thread generally used: No. 16, 2-ply, wool yarn.

The manner of leading both threads through the tensions, thread guides, etc., is shown in the above illustration.

This machine is fitted with the tandem differential feed. See page 30.

For adjusting the needle, spreader and looper, see page 24.

For oiling machine, see page 19.

The average speed of this machine, when used for the operation above noted, is 3400 R. P. M. See page 42.

The short looper gauge should be $\frac{3}{16}$ inch. See page 25.

Clean and Oil Machine AT LEAST ONCE Every Day

From the library of Diamond Needle Corp

15400 A C

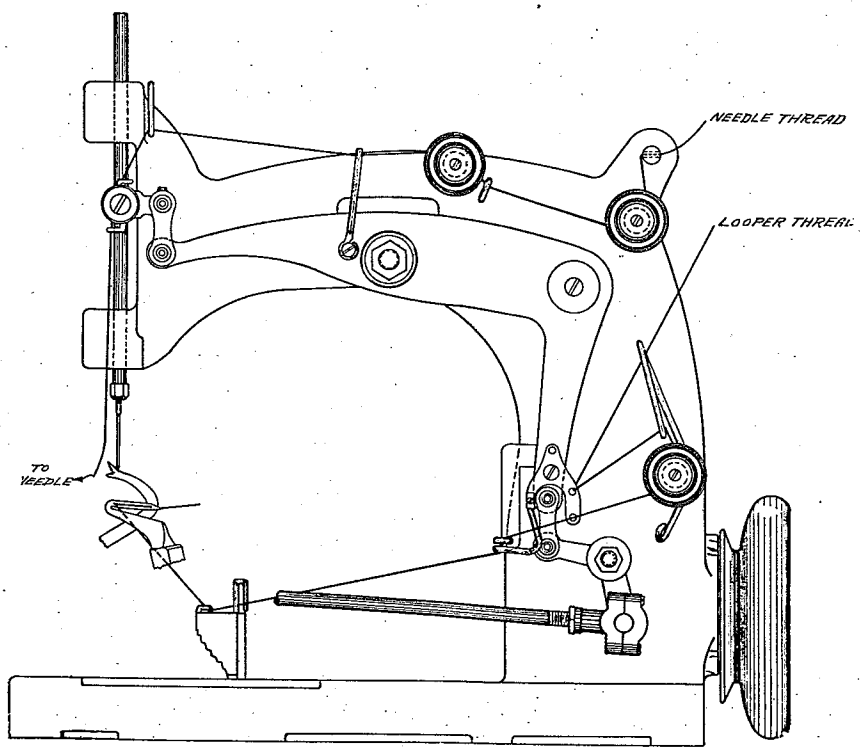

This machine is extensively used for hemming heavy sweaters. It makes the 2-thread stitch, using the short looper and the long spreader, and therefore belongs in Group 2. See page 10.

Needle generally used: Type 150, size 044. See page 40.

Needle thread generally used: No. 40, 3-cord, soft finish cotton.

Looper thread generally used: No. 16, 2-ply, wool yarn.

The manner of leading both threads through the tensions, thread guides, etc., is shown in the above illustration.

This machine is fitted with the tandem differential feed. See page 30.

For adjusting the needle, spreader and looper, see page 24.

For oiling machine, see page 19.

The average speed of this machine, when used for the operation above noted, is 3400 R. P. M. See page 42.

The short looper gauge should be $\frac{3}{16}$ inch. See page 25.

Clean and Oil Machine AT LEAST ONCE Every Day

From the library of: Diamond Needle Corp

15400 A D

This machine is extensively used for seaming heavy sweaters. It makes the 3-thread elastic, or "Square-edge" stitch, using the short looper and the long looper, and therefore belongs in Group 1. See page 8.

Needle generally used: Type 150, size 054. See page 40.

Needle thread generally used: No. 40, 3-cord, soft finish cotton.

Looper threads generally used: No. 16, 2-ply, wool yarn.

The manner of leading all three threads through the tensions, thread guides, etc., is the same as in the 15400 Q, which is illustrated on page 55.

This machine is fitted with the tandem differential feed. See page 30.

For adjusting the needle and both loopers, see page 24.

For oiling machines, see page 19.

The average speed of this machine, when used for the operation above noted, is 3400 R. P. M. See page 42.

The short looper gauge should be $\frac{3}{16}$ inch. See page 25.

15400 A E

This machine is extensively used for closing toes of stockings with an elastic stitch, which is equal to the maximum stretch of the material. It makes the 2-thread stitch, using the short spreader and the long looper, and therefore belongs in Group 3. See page 11.

The throat plate is provided with an upwardly extending edge guide.

Needle generally used: Type 150, size 032. See page 40.

Needle thread and looper thread generally used: No. 100, 3-cord, soft finish cotton.

The manner of leading both threads through the tensions, thread guides, etc., is the same as in the 15400 A, which is illustrated on page 43.

This machine is fitted with the tandem differential feed. See page 30.

For adjusting the needle, spreader and looper, see page 24.

For oiling machine, see page 19.

The average speed of this machine, when used for the operation above noted, is 3400 R. P. M. See page 42.

The short spreader gauge should be $\frac{7}{32}$ inch. See page 25.

Clean and Oil Machine AT LEAST ONCE Every Day

From the library of: Diamond Needle Corp

15400 A F

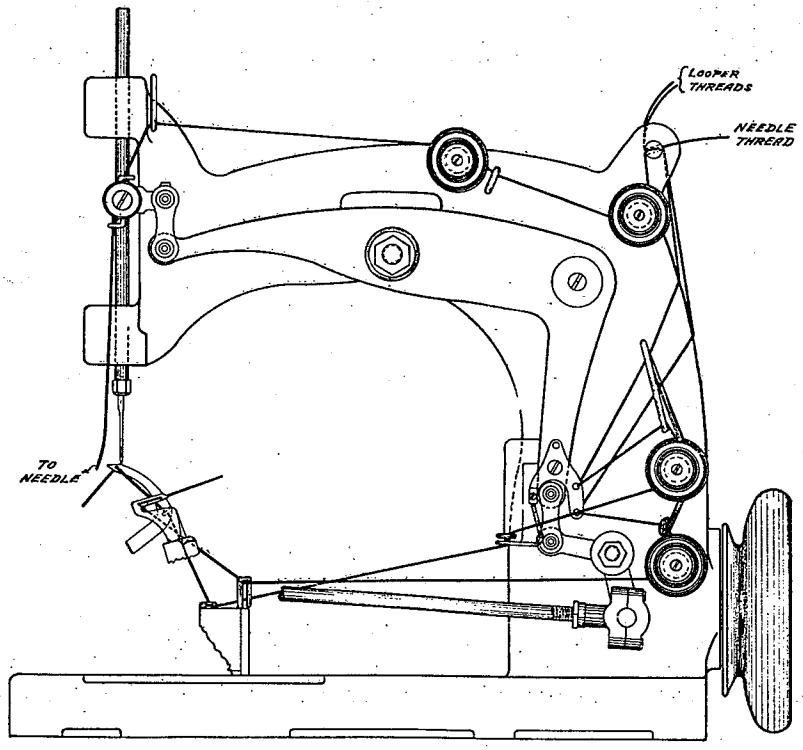

This machine is extensively used for finishing the trimmed edges of both knitted and woven fabrics. It makes the 3-thread elastic, or "Square-edge" stitch, 3/8 inch wide, using the short looper and the long looper, and therefore belongs in Group 1. See page 8.

Needle generally used: Type 150, size 054. See page 40.

Needle thread and looper threads generally used: No. 10, 2-cord, mercerized cotton.

The manner of leading all three threads through the tensions, thread guides, etc., is shown in the above illustration.

This machine is fitted with the tandem differential feed. See page 30.

For adjusting the needle and both loopers, see page 24.

For oiling machine, see page 19.

The average speed of this machine, when used for the operation above noted, is 3400 R. P. M. See page 42.

The short looper gauge should be $\frac{3}{16}$ inch. See page 25.

Clean and Oil Machine AT LEAST ONCE Every Day

From the library of: Diamond Needle Corp

15400 A G

This machine is extensively used for seaming and sewing in sleeves in waists and similar garments. It makes the 3-thread flat, or "Union Overseaming Stitch," using the short looper and the long looper, and therefore belongs in Group 1. See page 8.

This machine makes a felled seam, the trimmed edges being turned downwardly. See page 13.

Needle generally used: Type 150, size 036. See page 40.

Needle thread and looper threads generally used: No. 50, 3-cord, soft finish cotton.

The manner of leading all three threads through the tensions, thread guides, etc., is the same as in the 15400 H, which is illustrated on page 49.

This machine is fitted with the tiltable feed. See page 28.

For adjusting the needle and both loopers, see page 24.

For oiling machine, see page 19.

The average speed of this machine, when used for the operation above noted, is 3200 R. P. M. See page 42.

The short looper gauge should be $\frac{3}{16}$ inch. See page 25.

From the library of Diamond Needle Corp

15400 A H

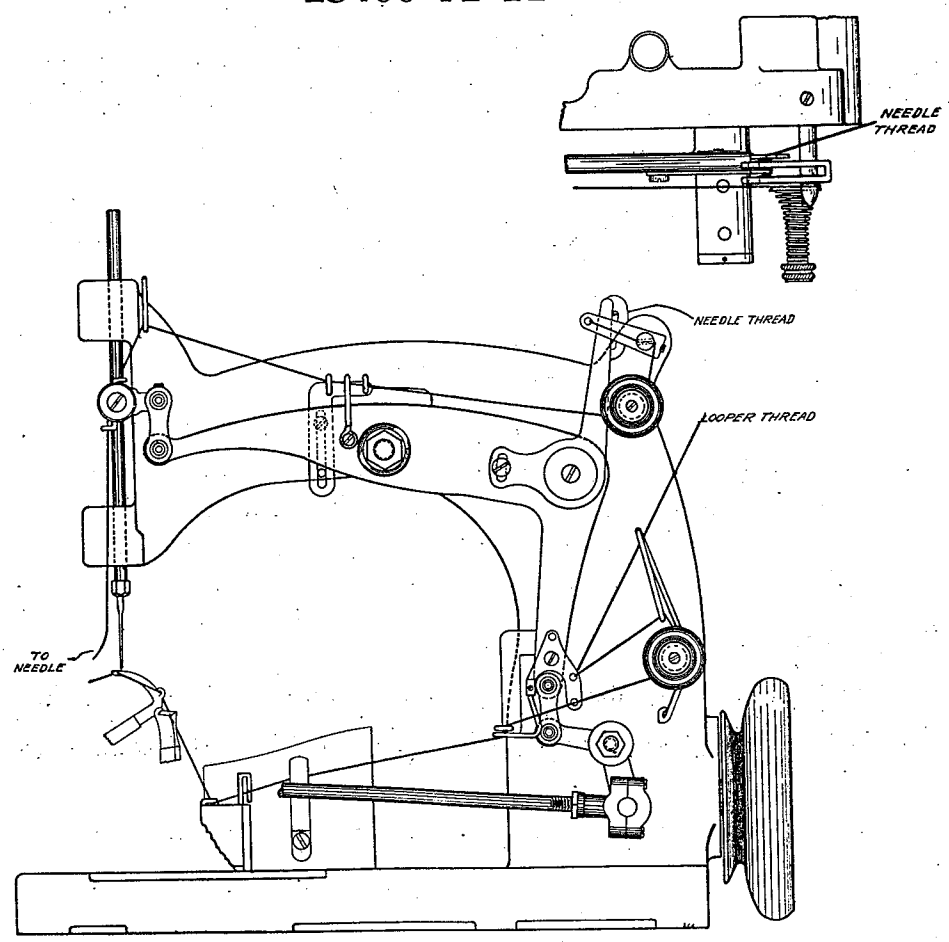

This machine is extensively used for finishing the trimmed edges of handkerchiefs and other woven fabrics. It makes the 2-thread "Picot" stitch, using the short spreader and the long looper, and therefore belongs in Group 3. See page 11. The picots are formed with every third needle thread loop.

This machine makes a felled seam, the trimmed edge being turned downwardly. See page 13.

Needles generally used: Type 150, sizes 032 and 036. See page 40.

Needle thread and looper thread generally used: No. 70, 2-ply, cotton yarn.

The manner of leading both threads through the tensions, thread guides, etc., is shown in the above illustration.

This machine is fitted with the plain feed. See page 28.

For adjusting the needle, spreader and looper, see page 24.

For oiling machine, see page 19.

The average speed of this machine, when used for the operation above noted, is 2600 R. P. M. See page 42.

The short spreader gauge should be $\frac{7}{32}$ inch. See page 25.

Clean and Oil Machine AT LEAST ONCE Every Day

From the library of: Diamond Needle Corp

15400 A J

This machine is extensively used for finishing the trimmed edges of handkerchiefs and other woven fabrics. It makes the 2-thread "Picot" stitch, using the short spreader and the long loper, and therefore belongs in Group 3. See page 11. The picots may be variably spaced and also spaced in groups, depending on the pattern cam employed.

This machine makes a felled seam, the trimmed edge being turned downwardly. See page 13.

Needles generally used: Type 150, sizes 032 and 036. See page 40.

Needle thread and looper thread generally used: No. 70, 2-ply, cotton yarn.

The manner of leading both threads through the tensions, thread guides, etc., is the same as in the 15400 AH, which is illustrated on the preceding page.

This machine is fitted with the plain feed. See page 28.

For adjusting the needle, spreader and looper, see page 24.

For oiling machine, see page 19.

The average speed of this machine, when used for the operation above noted, is 2600 R. P. M. See page 42.

The short spreader gauge should be $\frac{7}{32}$ inch. See page 25.

Clean and Oil Machine AT LEAST ONCE Every Day

From the library of Diamond Needle Corp

15500 A

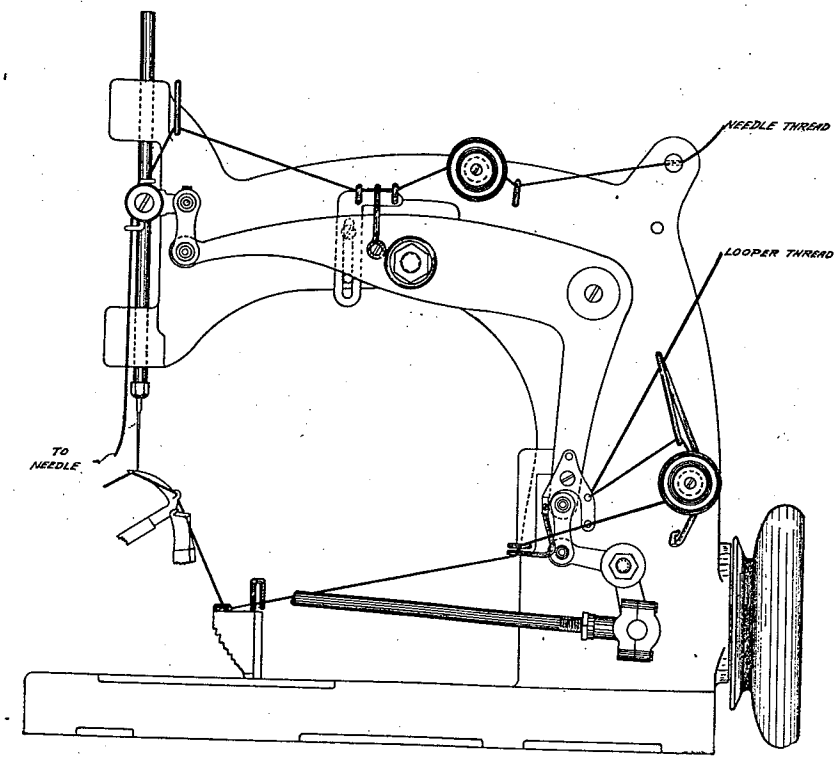

This machine is extensively used for serging trousers and similar garments. It makes the 2-thread stitch, using the short spreader and the long looper, and therefore belongs in Group 3. See page 11.

Needle generally used: Type 150, size 040. See page 40.

Needle thread and looper thread generally usd: No. 70, 3-cord, soft finish cotton.

The manner of leading both threads through the tensions, thread guides, etc., is shown in the above illustration.

This machine is fitted with the plain feed. See page 28.

For adjusting the needle, spreader and looper, see page 24.

For oiling machine, see page 19.

The average speed of this machine, when used for the operation above noted, is 3000 R. P. M. See page 42.

The short spreader gauge should be $\frac{7}{32}$ inch. See page 25.

Clean and Oil Machine AT LEAST ONCE Every Day

From the library of: Diamond Needle Corp

15500 C

This machine is extensively used for finishing the edges of both knitted and woven fabrics. It makes the 2-thread stitch, using the short spreader and the long looper, and therefore belongs in Group 3. See page 11.

Needles generally used: Type 150, sizes 036 and 040. See page 40.

Needle thread and looper thread generally used: No. 30, 2-cord, mercerized cotton.

The manner of leading both threads through the tensions, thread guides, etc., is the same as in the 15400 A, which is illustrated on page 43.

This machine is fitted with the tandem differential feed. See page 30.

For adjusting the needle, spreader and looper, see page 24.

For oiling machine, see page 19.

The average speed of this machine, when used for the operation above noted, is 3200 R. P. M. See page 42.

The short spreader gauge should be $\frac{7}{32}$ inch. See page 25.

From the library of: Diamond Needle Corp

15500 D

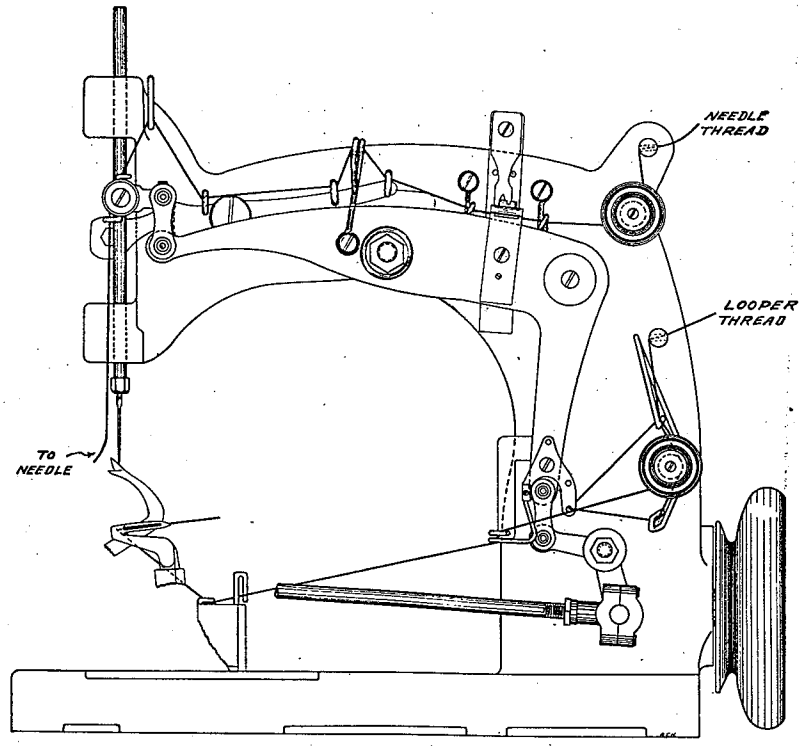

This machine is extensively used for serging carpets. It makes the 2-thread stitch, using the short looper and the long spreader, and therefore belongs in Group 2. See page 10.

A re-enforcing tape is positioned around the edge of the carpet, and is held in place and covered by the needle thread and looper thread. See page 14.

Needle generally used: Type 150, size 049. See page 40.

Needle thread and looper thread generally used: No. 20, 2-cord, mercerized cotton.

The manner of leading both threads through the tensions, thread guides, etc., is shown in the above illustration.

This machine is fitted with the plain feed. See page 28.

For adjusting the needle, looper and spreader, see page 24.

For oiling machine, see page 19.

The average speed of this machine, when used for the operation above noted, is 3000 R. P. M. See page 42.

The short looper gauge should be 1/8 inch. See page 25.

Clean and Oil Machine AT LEAST ONCE Every Day

From the library of: Diamond Needle Corp

15500 E

This machine is extensively used for seaming the selvages of sweaters and other heavy-weight knitted materials. It makes the 2-thread stitch, using the short spreader and the long looper, and therefore belongs in Group 3. See page 11.

Needle generally used: Type 150, size 054. See page 40.

Needle thread and looper thread generally used: No. 16, 2-ply, wool yarn.

The manner of leading both threads through the tensions, thread guides, etc., is the same as in the 15400 A, which is illustrated on page 43.

This machine is fitted with the tandem differential feed. See page 30.

For adjusting the needle, spreader and looper, see page 24.

For oiling machine, see page 19.

The average speed of this machine, when used for the operation above noted, is 3200 R. P. M. See page 42.

The short spreader gauge should be $\frac{3}{16}$ inch. See page 25.

From the library of: Diamond Needle Corp

15500 F

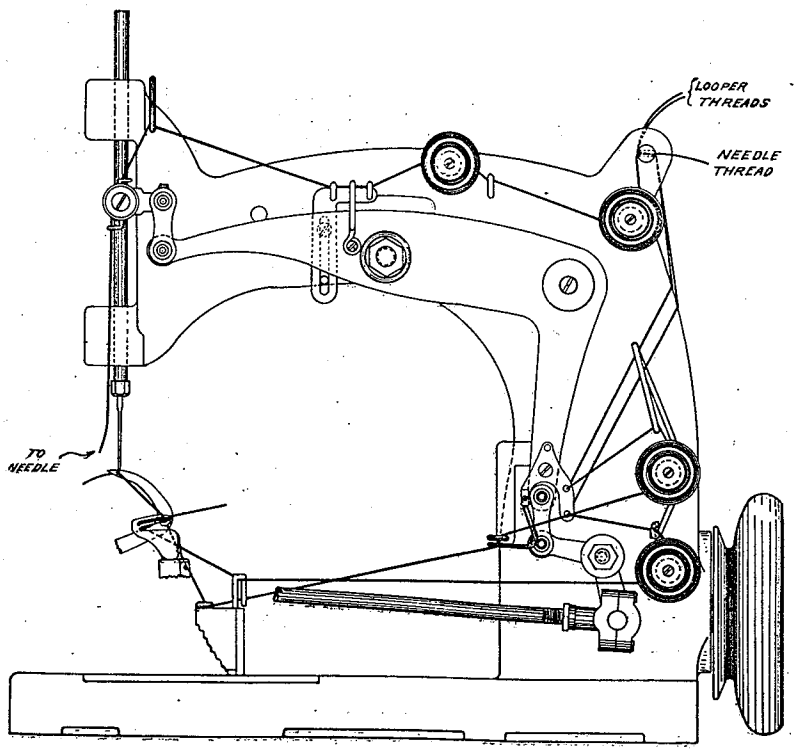

This machine is extensively used for finishing the edges of both knitted and woven fabrics. It makes the 3-thread elastic, or "Square-edge" stitch, $\frac{3}{8}$ inch wide, using the short looper and the long looper, and therefore belongs in Group 1. See page 8.

A re-enforcing tape is positioned on the upper face of the fabric, and is held in place and covered by the long looper thread. See page 14.

Needle generally used: Type 150, size 054. See page 40.

Needle thread and looper thread generally used: No. 10, 2-cord, mercerized cotton.

The manner of leading all three threads through the tensions, thread guides, etc., is shown in the above illustration.

This machine is fitted with the tandem differential feed. See page 30.

For adjusting the needle and both loopers, see page 24.

For oiling machine, see page 19.

The average speed of this machine, when used for the operation above noted, is 3200 R. P. M. See page 42.

The short looper gauge should be $\frac{3}{16}$ inch. See page 25.

Clean and Oil Machine AT LEAST ONCE Every Day

From the library of: Diamond Needle Corp

15500 G

This machine is extensively used for finishing the edges of handkerchiefs and other woven fabrics. It makes the 2-thread "Picot" stitch, using the short spreader and the long looper, and therefore belongs in Group 3. See page 11. The picots are formed with every third needle thread loop.

This machine makes a felled seam, the edge being turned downwardly. See page 13.

Needles generally used: Type 150, sizes 032 and 036. See page 40.

Needle thread and looper thread generally used: No. 70, 2-cord, cotton yarn.

The manner of leading both threads through the tensions, thread guides, etc., is the same as in the 15400 A H, which is illustrated on page 66.

This machine is fitted with the plain feed. See page 28.

For adjusting the needle, spreader and looper, see page 24.

For oiling machine, see page 19.

The average speed of this machine, when used for the operation above noted, is 2600 R. P. M. See page 42.

The short spreader gauge should be $\frac{7}{32}$ inch. See page 25.

15500 H

This machine is extensively used for finishing the edges of handkerchiefs and other woven fabrics. It makes the 2-thread "Picot" stitch, using the short spreader and the long looper, and therefore belongs in Group 3. See page 11. The picots may be variably spaced and also spaced in groups, depending on the pattern cam employed.

This machine makes a felled seam, the edge being turned downwardly. See page 13.

Needles generally used: Type 150, size 032 and 036. See page 40.

Needle thread and looper thread generally used: No. 70, 2-cord, cotton yarn.

The manner of leading both threads through the tensions, thread guides, etc., is the same as in the 15400 A H, which is illustrated on page 66.

This machine is fitted with the plain feed. See page 28.

For adjusting the needle, spreader and looper, see page 24.

For oiling machine, see page 19.

The average speed of this machine, when used for the operation above noted, is 2600 R. P. M. See page 42.

The short spreader gauge should be $\frac{7}{32}$ inch. See page 25.

Clean and Oil Machine AT LEAST ONCE Every Day

From the library of: Diamond Needle Corp

15600 A

This machine is extensively used for binding shoe tongues. It makes the 3-thread flat, or "Union Overseaming Stitch," using the short looper and the long looper, and therefore belongs in Group 1. See page 8.

Needle generally used: Type 150, size 040. See page 40.

Needle thread and looper threads generally used: No. 40, 3-cord, glaze finish cotton.

The manner of leading all three threads through the tensions, thread guides, etc., is the same as in the 15400 H, which is illustrated on page 49.

This machine is fitted with the plain bottom feed dog and with a top feed dog. See page 32.

For adjusting the needle and both loopers, see page 24.

For oiling machine, see page 19.

The average speed of this machine, when used for the operation above noted, is 3000 R. P. M. See page 42.

The short looper gauge should be $\frac{3}{16}$ inch. See page 25.

From the library of: Diamond Needle Corp

15600 B

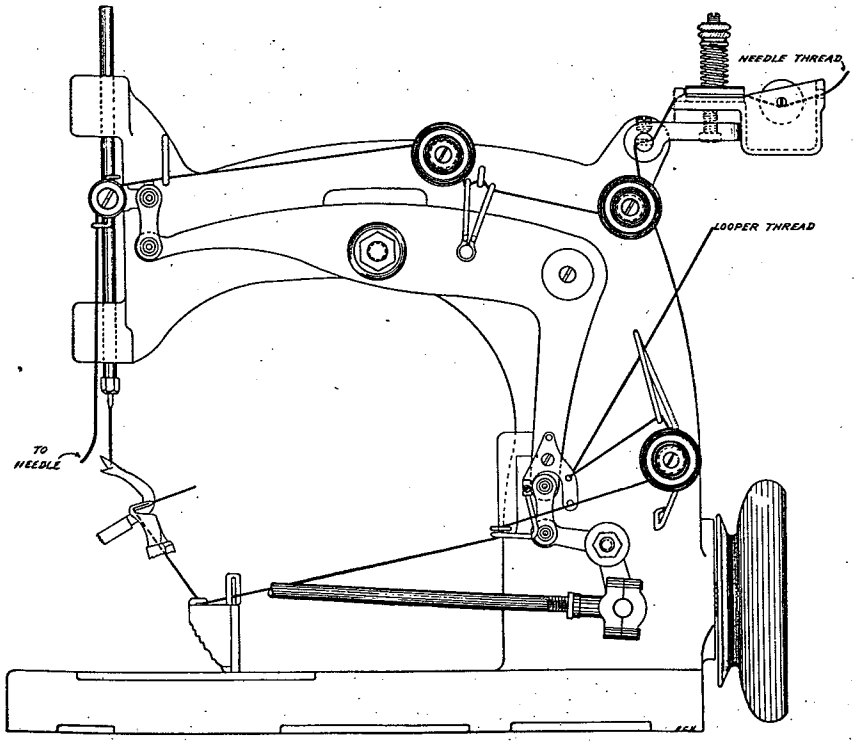

This machine is extensively used for seaming superposed edges of leather glove fourchettes. It makes an ornamental 2-thread stitch, using the short looper and the long spreader, and therefore belongs in Group 2. See page 10.

Needle generally used: Type 150, size 044. See page 40.

Needle thread generally used: No. 24, 4-cord, glaze finish cotton.

Looper thread generally used: No. 12, 4-cord, soft finish cotton.

The manner of leading both threads through the tensions, thread guides, etc., is shown in the above illustration.

This machine is fitted with the plain bottom feed dog and with a top feed dog. See page 32.

For adjusting the needle, spreader and looper, see page 24.

For oiling machine, see page 19.

The average speed of this machine, when used for the operation above noted, is 3000 R. P. M. See page 42.

The short looper gauge should be $\frac{3}{16}$ inch. See page 25.

Clean and Oil Machine AT LEAST ONCE Every Day

From the library of Diamond Needle Corp

From the library of: Diamond Needle Corp